Cummins

Parts Catalog

N14

Celect
Industrial

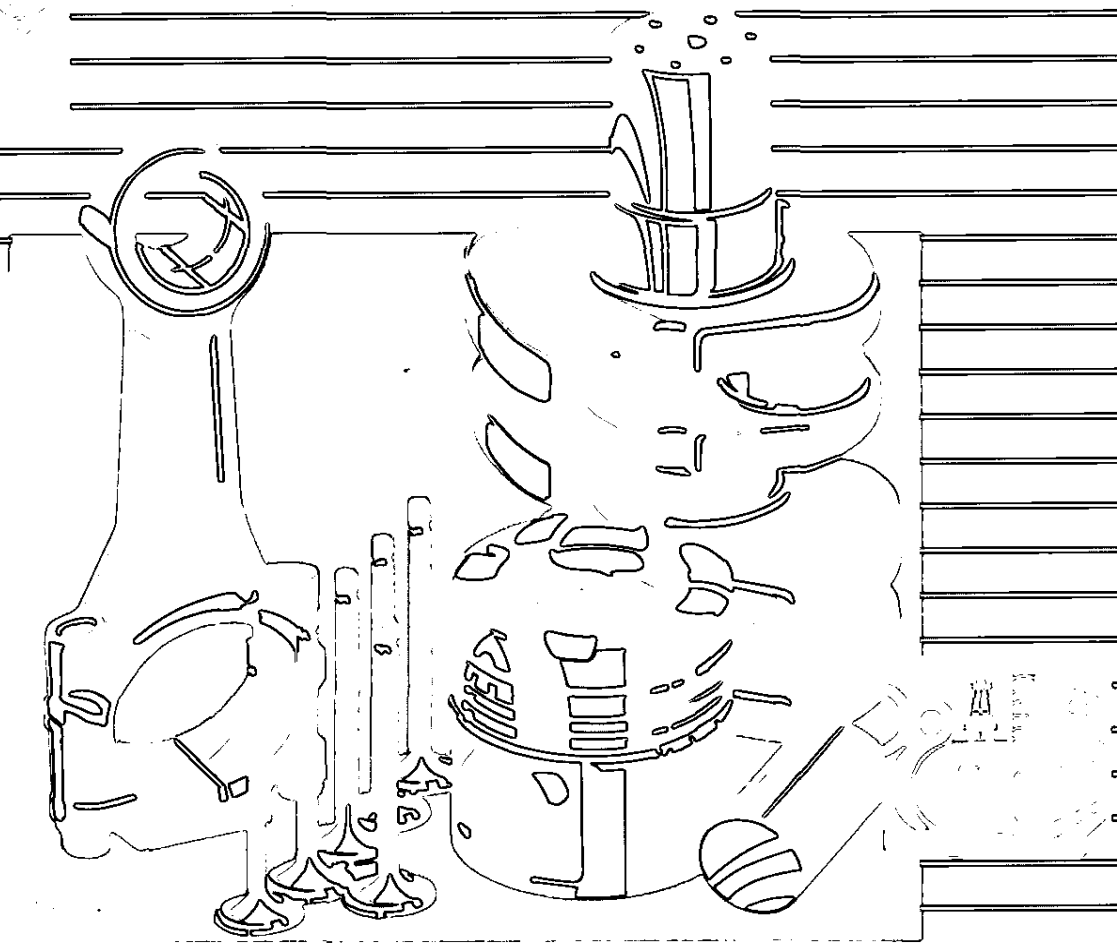

Parts Catalog

N14

Celect
Industrial

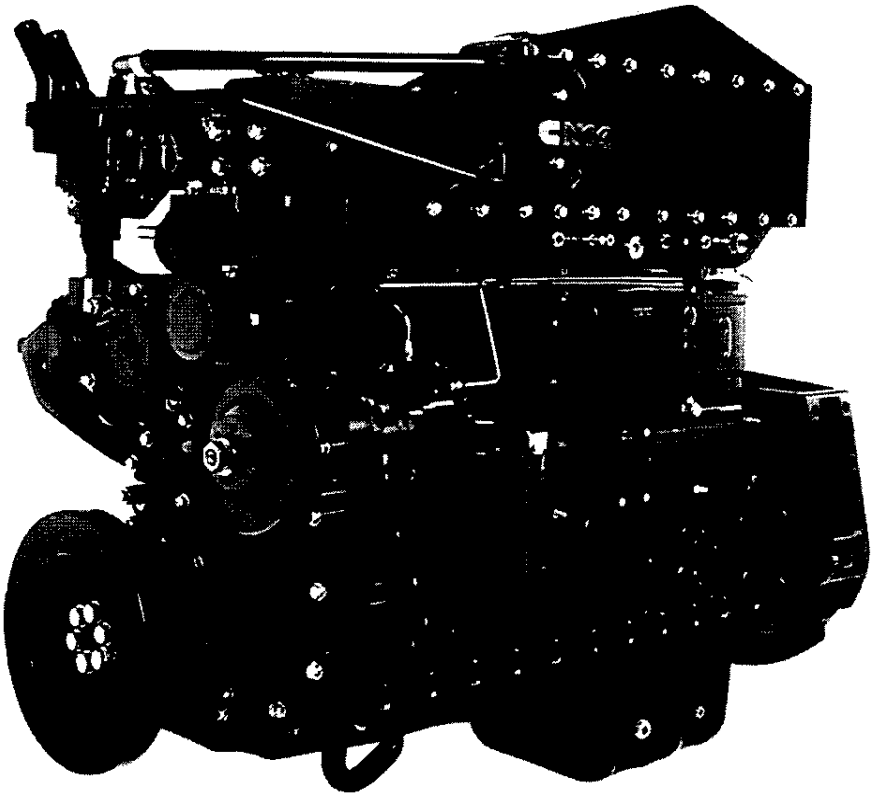

Cummins Engine Co., Inc.

New Parts Warranty
Heavy Duty

COVERAGE

PRODUCTS WARRANTED

These warranties apply to New Parts marketed by Cummins for its engines (except those for A, B, and C series engines). They apply anywhere in the world where service is available through a Cummins distributor or full service dealer.*

BASE WARRANTY

The Base Warranty covers any failures of parts on or after March 31, 1986, which result, under normal use and service, from defects in workmanship or material (Warrantable Failures). The coverage on cylinder kits designated by Cummins as "Premium Plus" extends two years, 200,000 miles (321,870 kilometers) or 7,200 hours of operation, whichever occurs first, from the date of first installation. The coverage on other parts extends one year, 100,000 miles (160,935 kilometers) or 3,600 hours of operation, whichever occurs first, from the date of first installation.

EXTENDED MAJOR COMPONENTS WARRANTY

The Extended Major Components Warranty covers Warrantable Failures on or after March 31, 1986, of engine cylinder blocks, crankshafts, flangeless NT camshafts** and connecting rods (Covered Parts). Bushing and bearing failures are not included. This coverage begins with the expiration of the Base Warranty and ends three years, 300,000 miles (482,805 kilometers) or 10,800 hours of operation, whichever occurs first, from the date of first installation.

Both the Base Warranty and Extended Major Components Warranty apply to all Owners in the chain of distribution, and coverage continues to all subsequent Owners until the end of the respective periods of coverage.

CUMMINS RESPONSIBILITIES

DURING THE BASE WARRANTY

Cummins will pay for all parts and labor needed to repair the damage to the engine resulting from the Warrantable Failure. All labor costs will be paid in accordance with Cummins published Standard Repair Operation guidelines.

Cummins will pay for the lubricating oil, antifreeze, filter elements, and other maintenance items that are not reusable due to the Warrantable Failure.

Cummins will pay reasonable labor costs for engine removal and reinstallation when necessary to make the warranty repair.

When the parts are installed in a non-automotive engine, Cummins will pay reasonable travel expenses for mechanics to and from the engine site, or the repair dock in the case of a marine engine, including meals, mileage and lodging when it is necessary for mechanics to make on-site warranty repairs.

DURING THE EXTENDED MAJOR COMPONENTS WARRANTY

Cummins will pay for the Covered Part and for any Covered Part damaged by a Warrantable Failure of another Covered Part.

OWNER RESPONSIBILITIES

DURING THE BASE WARRANTY

Before expiration of the warranty, Owner must give notice to a Cummins distributor or full service dealer* of a failure considered to be warrantable and have the repair performed by such facility.

If the part was installed in an automotive engine, the Owner must deliver the engine to the repair location. If installed in a marine engine, Owner is responsible for the cost of towing the boat to a repair dock and for any associated docking and harbor charges.

Owner is responsible for the cost of lubricating oil, antifreeze, filter elements and other maintenance items replaced during warranty repairs except where such items are not reusable due to a Warrantable Failure.

DURING THE EXTENDED MAJOR COMPONENTS WARRANTY

Before expiration of the warranty, Owner must give notice to a Cummins distributor or full service dealer* of a failure considered to be warrantable and deliver the defective and damaged Covered Parts to such facility.

Owner is responsible for the cost of all parts needed for the repair except for the defective Covered Part and for any Covered Part damaged by a Warrantable Failure of another Covered Part.

Owner is responsible for the cost of all labor needed to repair the engine, including the labor to remove and reinstall the engine. When Cummins elects to repair a part instead of replacing it, Owner is not responsible for the labor needed to repair the part.

Owner is responsible for the cost of lubricating oil, antifreeze, filter elements and other maintenance items replaced during the repair.

DURING BOTH WARRANTIES

At the time when the parts are installed, Owner is responsible for the preparation of a written record containing the following: (1) the date of installation of the parts; (2) the engine serial number; (3) the engine miles, hours or kilometers of operation; (4) the parts installed, and (5) the location of the parts in the engine. The purpose of this record is to protect Owner's interests and support any claim for a Warrantable Failure.

Owner is responsible for the operation and maintenance of the engine as specified in Cummins Operation and Maintenance Manuals.

Owner is responsible for communication expenses, meals, lodging and similar costs incurred by Owner as a result of a Warrantable Failure. Owner is responsible for non-engine repairs and for "down time" expenses, cargo damage and all business costs and losses resulting from a Warrantable Failure. CUMMINS IS NOT RESPONSIBLE FOR INCIDENTAL OR CONSEQUENTIAL DAMAGES.

LIMITATIONS

Cummins is not responsible for failures resulting from Owner or Operator abuse or neglect, such as: operation without adequate coolant, fuel or lubricants; overfueling; overspeeding; lack of maintenance of lubricating, cooling or air intake systems; improper storage, starting, warm-up, run-in or shutdown practices. Cummins is also not responsible for failures caused by incorrect fuel, or by water, dirt or other contaminants in the fuel.

Cummins does not warrant parts supplied by Cummins which bear the name of another company. These parts are warranted by their manufacturers and not by Cummins. This category of parts includes, but is not limited to: hydraulic pumps, alternators, starters, fans, air conditioning compressors, clutches, steering pumps, transmissions, torque converters, marine gears, air cleaners, filters and non-Cummins air compressors, power steering pumps, and engine compression brakes.

Parts provided may be new Cummins, Cummins approved rebuilt parts, or repaired parts. Cummins is not responsible for failures resulting from the use of parts not approved by Cummins.

Before a claim for excessive oil consumption will be considered, Owner must submit adequate documentation to show that consumption exceeds Cummins published standards.

This warranty does not apply to parts furnished by Cummins at no charge to the Owner.

INVEST IN THE BEST

Product Identification Information

Data plates should be referred for parts identification.

1. ENGINE DATA PLATE

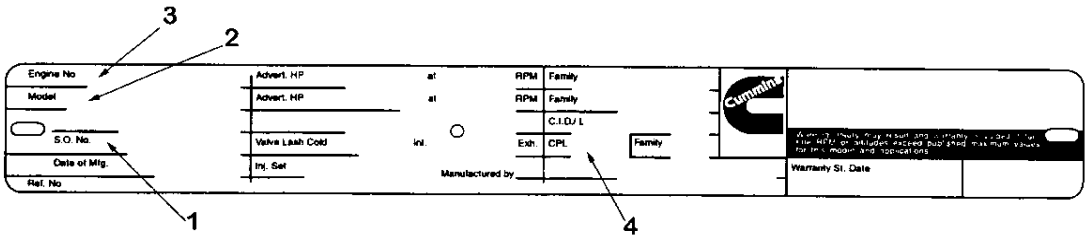

1. Shop order number
2. Model designation
3. Engine serial number
4. Control parts list

2. ELECTRONIC CONTROL MODULE DATA PLATE

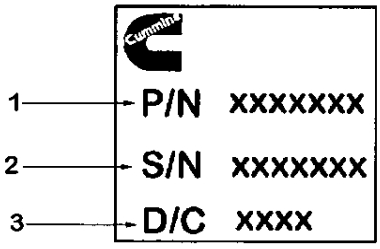

1. Part number
2. Serial number
3. Date code

This catalog was compiled by Pat Vails in Parts Communications.

Customer Service Information

This standard Parts Catalog contains parts information for the following Cummins Engine Model(s):

NTA14-CE D093634CX03 CPL 2261

Certain basic engine components have been matched to give optimum performance to your engine. The part numbers listed in this catalog for these components are for a standard engine configuration. When ordering any of the Control Parts List (CPL) components listed below, please order by part description and engine serial number. Reference to the CPL number stamped on the engine data (name) plate will also help identify the proper service parts for your engine.

Control Parts List (CPL) Components

Camshaft	Page 76	**Piston, Engine**	Page 75
Cylinder Head	Page 79	**Turbocharger**	Page 83
Injector	Page 81	**Exhaust Manifold**	Page 95

USER INFORMATION

- **Parts numbers appearing in ( ) are for identification purposes only and should not be used when ordering service replacement parts.**
- **The reference numbers appearing on the art pages is for publication use only.**
- **Assembly content is shown by part number indentation.**
- **Options are engineered production part groupings, specifically used for compiling engine orders.**
- **Option numbers are for reference only and are not sold for service.**
- **Use assembly and not option content to determine service parts replacement.**

ALWAYS SPECIFY ENGINE MODEL AND SERIAL NUMBER WHEN ORDERING PARTS FROM THIS CATALOG

Engine Model _____ Engine Serial No. _____

MFG Make _____ Model _____ Chassis No. _____

Fuel Pump Assembly No. _____ Injector No. _____

Belt, Fan _____ Belt, Water Pump _____ Belt, Gen. _____

Element, Fuel Filter _____ Full Flow Lub. Filter _____

Air Cleaner _____ By-Pass Lub. Filter _____

Special Equipment

_____

_____

_____

Table of Contents

	Page No.
Accessory Drive Pulley	2, 3
Aftercooler Water Plumbing	103
Agency Approval	4
Air Compressor	16
Alternator	24
Alternator Drive Pulley	28
Alternator Mounting	27
Cam Follower	21
Camshaft	76
Celect Fuel Pump	43, 45
Corrosion Resistor	105
Crankcase Breather	15
Crankshaft	11
Cylinder Block	7
Cylinder Block Cover	62
Cylinder Head	79
Cylinder Liner Kit	8
Electronic Control Module Plumbing	69
Engine Control Module	71
Engine Instrument	29
Engine Oil Cooler	57
Engine Piston	75
Exhaust Outlet Connection	112
Flywheel	50
Flywheel Housing	39
Flywheel Housing Plumbing	36
Front Engine Support	30
Front Gear Cover	53
Fuel Filter	33
Fuel Filter Plumbing	35
Fuel Plumbing	49
Fuel Pump Coupling	40
Fuel Pump Drive	23
Fuel Pump Inlet Fitting	34
Fuel Pump Mounting	46
Full Flow Oil Filter	58
Injector And Mounting	81
Lifting Bracket	54
Lubricating Oil Pump	61
Main Bearings	11
Oil Level Gauge	59
Oil Pan	65
Oil Pan Mounting	67
Piston Cooling Nozzle	73
Remote Oil Drain	86
Rocker Lever	89
Starting Motor	90, 93
Thermostat Housing	97
Turbocharger	83
Turbocharger Arrangement	95
Turbocharger Kits	85
Turbocharger Plumbing	98
Valve Cover	101
Vibration Damper	19
Water Discharge Plumbing	104
Water Header Cover	12
Water Inlet Connection	106
Water Outlet Connection	107
Water Pump	109
Wiring Accessories	111
Option Number Index	A-1
Part Number Index	B-1

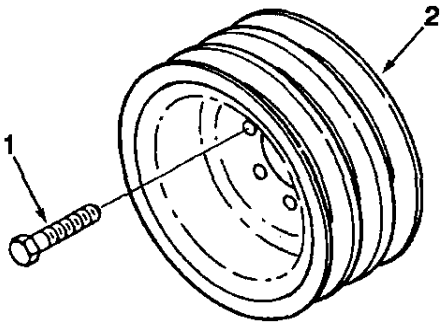

ad100gz

Ref No.	Part Number	Part Name	Req	Remarks
		ACCESSORY DRIVE PULLEY		
		OPTION AD1268		Bolt on pulley to provide two 7.04 inch diameter grooves from 7/8 inch V-belts located 4.125 and 5.125 inches forward of FFOB to drive fan and one 7.04 inch diameter groove for 1/2 inch V-belt located 5.94 inches forward of FFOB. Re: Large shaft.
1	175833	Screw, Hexagon Head Cap	6	
2	3013337	Pulley, Accessory Drive	1	

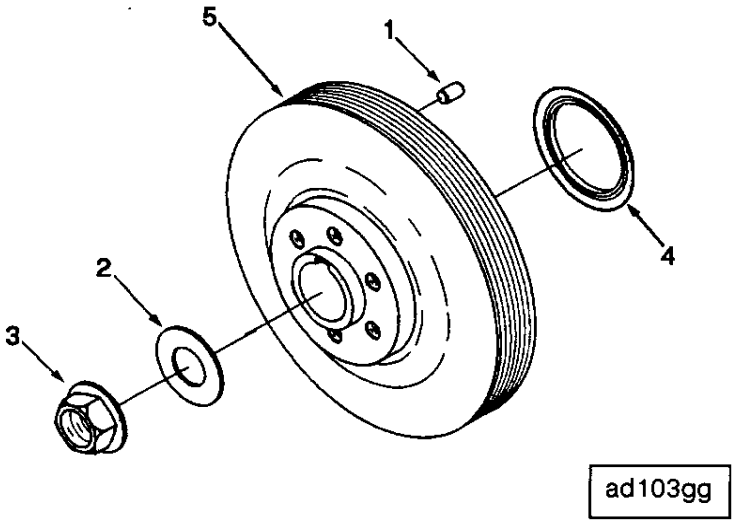

Ref No.	Part Number	Part Name	Req	Remarks
		ACCESSORY DRIVE PULLEY		
		OPTION AD1707		Water pump drive pulley. Groove type: poly V 6 rib "K". Pulley diameter (in): 8.75 (222.25 MM). Timing Mark location (dec): 70. Water pump drive pulley (base pulley) operates at engine speed and rotates same direction as the crankshaft. May be used with additional bolt on accessory drive pulleys for two piece accessory drive arrangement.
1	70550	Dowel, Pin	1	5/16 x 1/2 inch
2	193136	Washer, Plain	1	1 3/4 inch
3	3012526	Nut, Hexagon Flange	1	7/8 - 14 UNF
4	3076202	Seal, Dust	1	
5	3095130	Pulley, Accessory Drive	1	

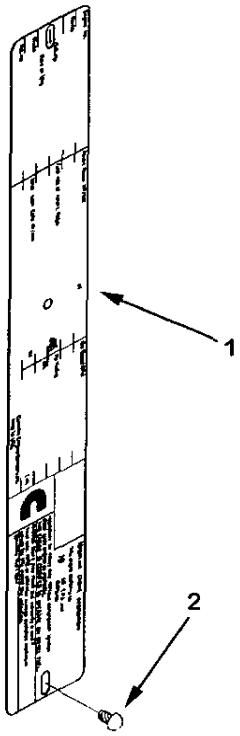

ap100ge

Ref No.	Part Number	Part Name	Req	Remarks
		AGENCY APPROVAL		
		OPTION AP1016		Mobile off-highway EPA and CARB certification.
1	3096414	Dataplate	1	
2	*3056508*	*Screw, Drive*	*3*	

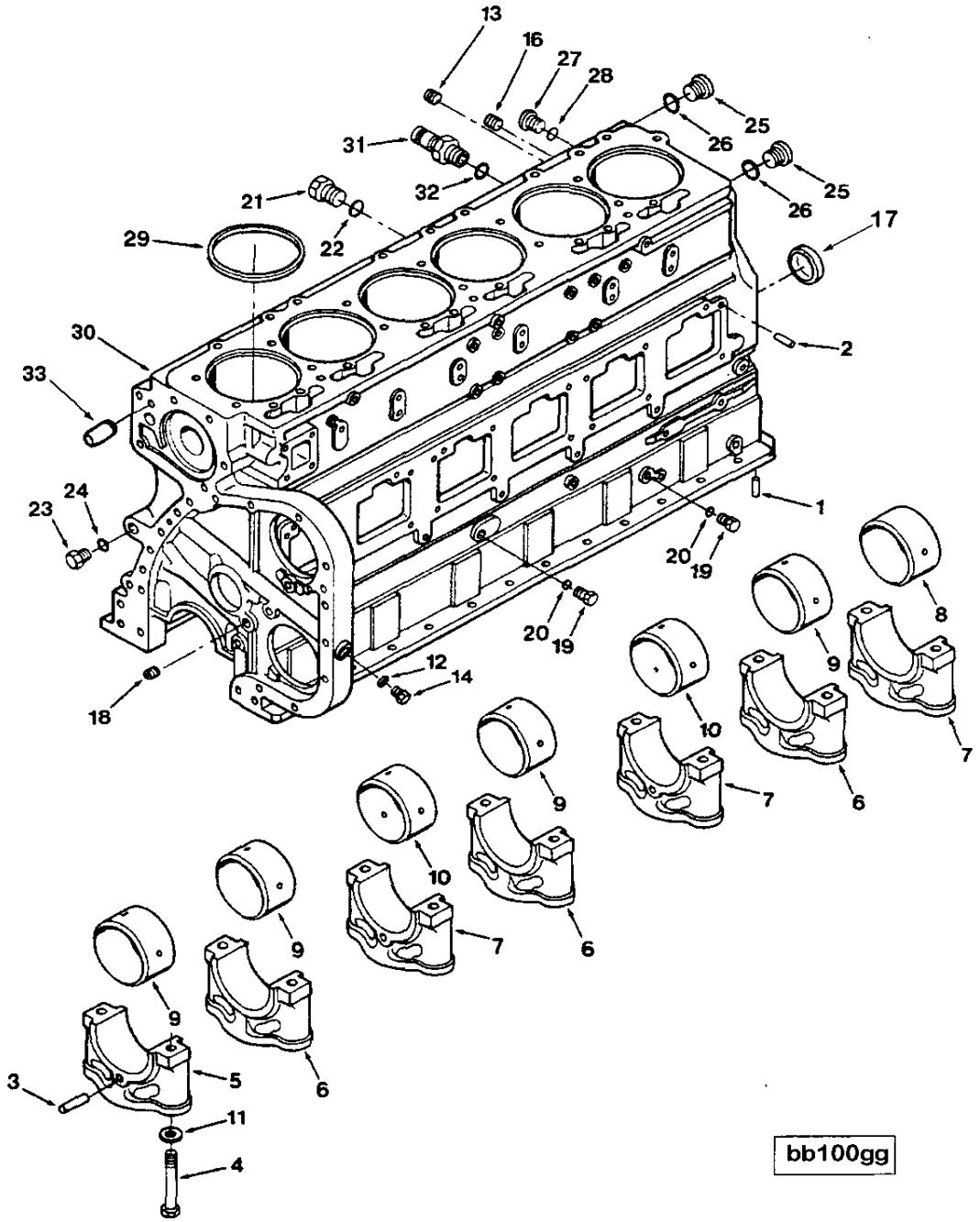
13
16
27
28
25
26
31
32
25
26
21
22
17
29
30
2
33
24
23
1
20
19
20
19
8
9
12
14
18
10
7
6
9
10
7
6
9
9
3
5
6
11
4
bb100gg

Ref No.	Part Number	Part Name	Req	Remarks
		CYLINDER BLOCK		
		OPTION BB1707		Engine block includes cylinder block, liners, crankshaft, HCR spur crankshaft gear, bearings, and associated block hardware for use with non-targeted piston cooling nozzles. Suits remote mounted "combo" filter setups. (Includes extra plug to plug-off the bypass return line provision).
	3803718	Block, Cylinder	1	
1	67211	Dowel, Rear Main Bearing	2	
2	68585	Dowel, Pin	6	
3	202903	Pin, Roll	2	
4	208346	Screw, Hexagon Head Cap	14	3/4 - 16 x 6 5/8 inch
5	3008047	Cap, Main Bearing	3	
6	3008048	Cap, Main Bearing	3	
7	3008049	Cap, Main Bearing	1	
8	3011951	Bushing	1	
9	3028075	Bushing	4	
10	3028269	Bushing	2	
11	3046246	Washer, Plain	14	3/4 inch
12	66292	Washer, Plain	1	7/8 inch
13	3025458	Plug, Pipe	4	1/8 NPT
14	210884	Plug, Threaded	1	7/8 - 18 UNS
16	3008468	Plug, Pipe	1	1/2 NPT
17	3011952	Plug, Expansion	1	
18	3013786	Plug, Pipe	3	3/8 NPT
19	3037536	Plug, Threaded	4	9/16 - 18 UNF
20	3037537	Seal, O-ring	2	
21	3040813	Plug, Threaded	1	
22	3035228	Seal, O-ring	1	
23	3046202	Plug, Threaded	3	3/4 - 16 UNF
24	3046201	Seal, O-ring	3	
25	3066323	Plug, Threaded	1	1 5/8 - 12 UN
26	3063166	Seal, O-ring	1	
27	3071181	Plug, Threaded	1	3/8 - 24 UNF
28	3034412	Seal, O-ring	1	
29	3054948	Ring, Liner Seal	6	0.0205 Inch (white)
29	3054947	Ring, Liner Seal	A/R	0.0195 Inch (black)
29	3054949	Ring, Liner Seal	A/R	0.0215 Inch (orange)
29	3019959	Ring, Liner Seal	A/R	0.031 Inch
29	3019960	Ring, Liner Seal	A/R	0.062 Inch
30	(3081280)	Block, Cylinder	1	
31	*3042619*	*Nipple, Coupling*	1	
32	3037537	Seal, O-ring	1	
33	3070475	Pin, Roll	1	
	69901	Plug, Pipe	4	

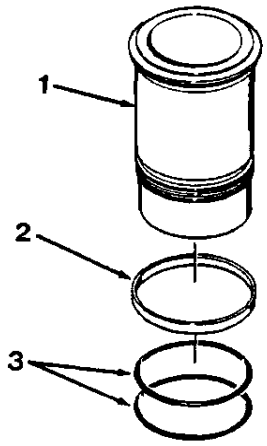

bb100gb

Ref No.	Part Number	Part Name	Req	Remarks
		CYLINDER LINER KIT		
		OPTION BB1707		
	3801826	Kit, Cylinder Liner	6	
1	(3055099)	Liner, Cylinder	1	
2	215090	Seal, O-ring	1	
3	3032874	Seal, O-ring	2	

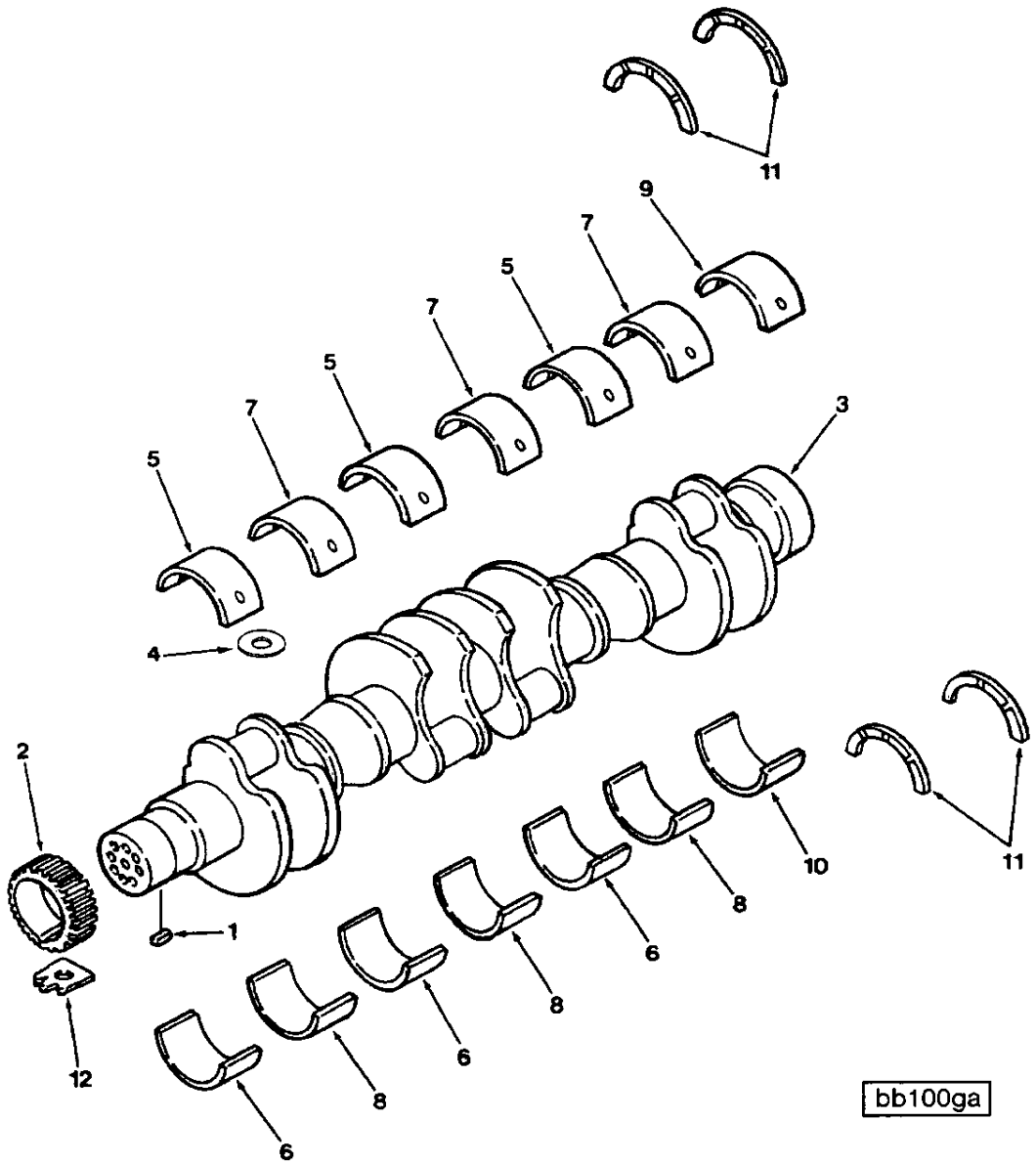
11
9
7
5
7
5
7
5
3
4
2
1
12
6
8
6
8
6
8
10
11
bb100ga

Ref No.	Part Number	Part Name	Req	Remarks
		CRANKSHAFT		
		OPTION BB1707		
1	210179	Key, Rectangular	1	
2	3073344	Gear, Crankshaft	1	HCR spur gear
3	3064291	Crankshaft, Engine	1	
		MAIN BEARINGS		
4	3037045	Dowel, Ring	7	
	3801260	Set, Main Bearing	1	Standard
5	3019174	Bearing, Main	3	Upper 1, 3 and 5
6	3019180	Bearing, Main	3	Lower 1, 3 and 5
7	3019186	Bearing, Main	3	Upper 2, 4 and 6
8	3019192	Bearing, Main	3	Lower 2, 4 and 6
9	3019198	Bearing, Main	1	Upper 7
10	3019204	Bearing, Main	1	Lower 7
11	3067568	Bearing, Thrust	4	
12	3009213	Lockplate	14	Not used on N14
	3801261	Set, Main Bearing	1	0.010 Inch Oversize
	3801262	Set, Main Bearing	1	0.020 Inch Oversize
	3801263	Set, Main Bearing	1	0.030 Inch Oversize
	3801264	Set, Main Bearing	1	0.040 Inch Oversize

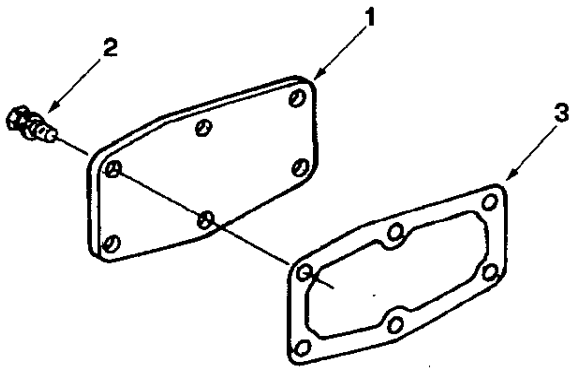

wh100gu

Ref No.	Part Number	Part Name	Req	Remarks
		WATER HEADER COVER		
		OPTION BB1707		
1	132019	Cover, Water Header	1	
2	3013904	Screw, Captive Washer Cap	6	1/2 - 20 x 5/8 Inch
3	3069098	Gasket, Cover Plate	1	

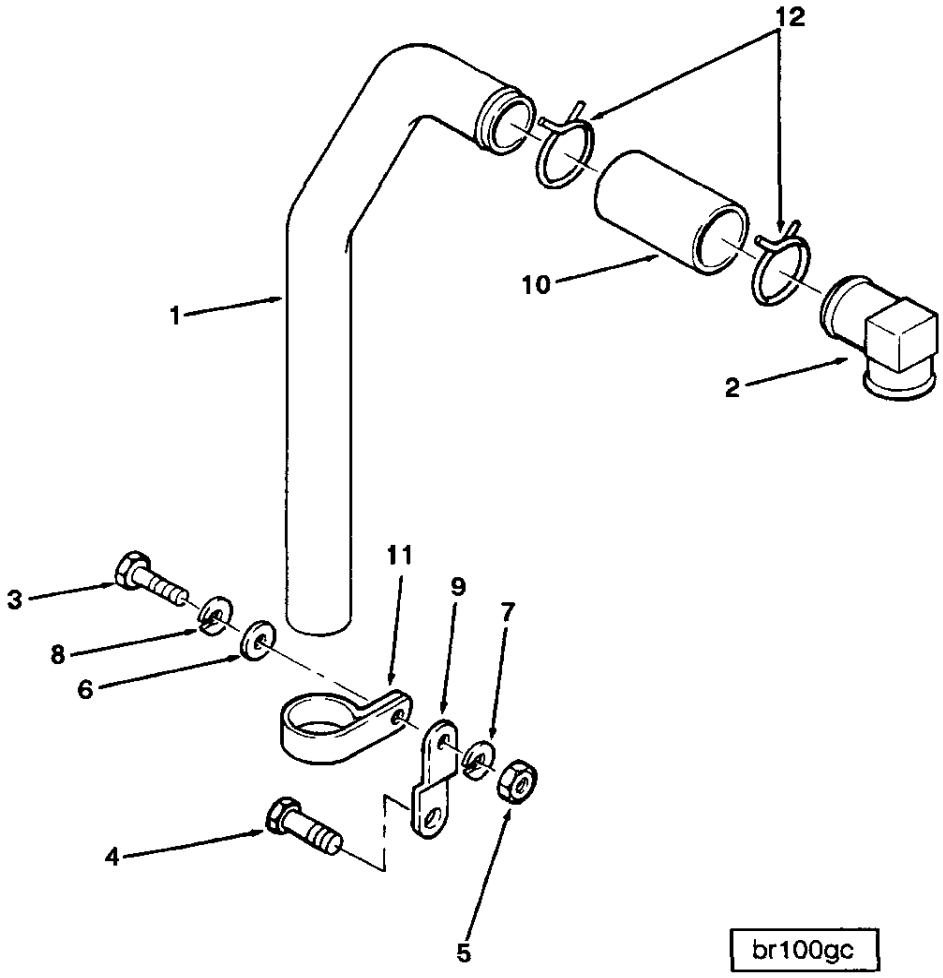
12
10
1
2
11
9
7
3
8
6
4
5
br100gc

Ref No.	Part Number	Part Name	Req	Remarks
		CRANKCASE BREATHER		
		OPTION BR1178		Breather located over No. 6 cylinder. Breather vent tube extends from No. 6 cylinder toward rear corner of cylinder block exhaust side. Clipped and terminated just below top of block.
1	3038035	Tube, Breather	1	
2	3047134	Tube, Breather	1	
3	S-109	Screw, Hexagon Head Cap	1	3/8 - 16 x 7/8 inch
4	S-190	Screw, Hexagon Head Cap	1	5/8 - 18 x 1 inch
5	S-223	Nut, Heavy Hexagon	1	3/8 - 16 UNC
6	S-602	Washer, Plain	2	3/8 inch
7	S-603	Washer, Lock	1	5/8 inch
8	S-604	Washer, Lock	1	3/8 inch
9	113710	Brace, Tube	1	
10	64775	Hose, Plain	1	
11	3082570	Clip	2	
12	3008596	Clamp, Spring Hose	2	

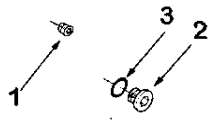

cp105go

Ref No.	Part Number	Part Name	Req	Remarks
		AIR COMPRESSOR		
		OPTION CP1049		To be selected when no air compressor is required. Contains plugs for the water supply, water drain, and air intake provisions on the engine.
1	3013786	Plug, Pipe	2	
2	3040818	Plug, Threaded	1	
3	3035228	Seal, O Ring	1	

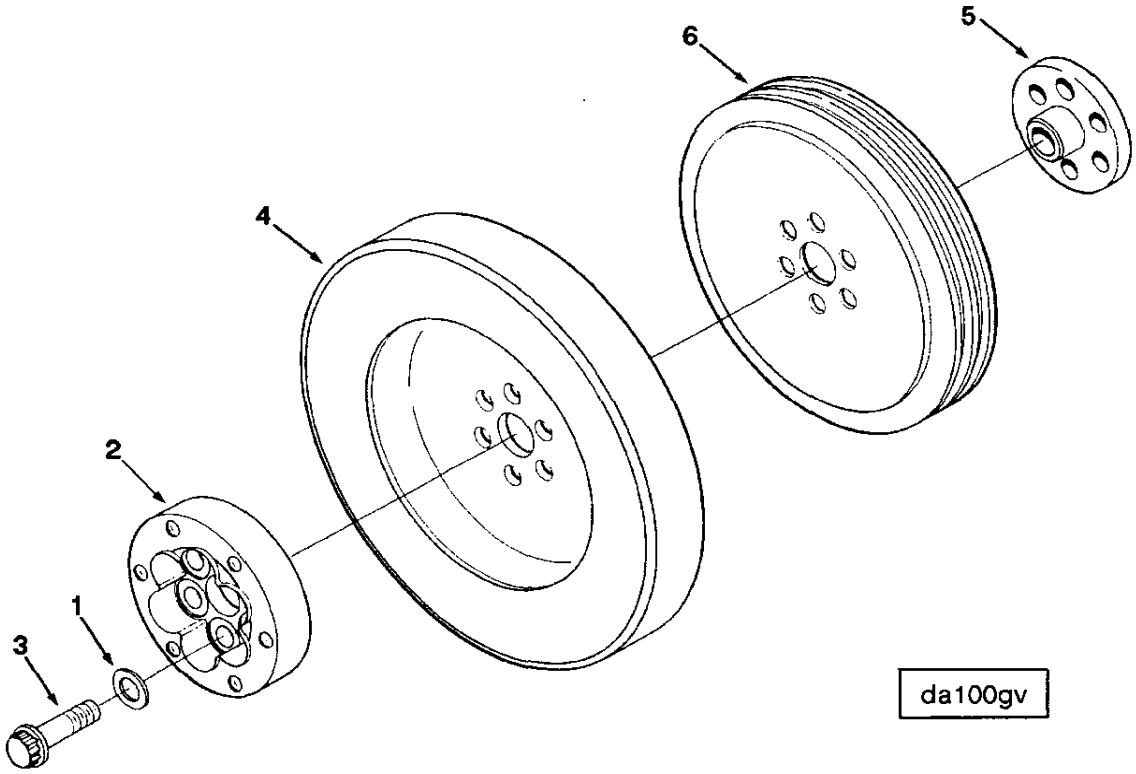
6
5
4
2
1
3
da100gv

Ref No.	Part Number	Part Name	Req	Remarks
		VIBRATION DAMPER		
		OPTION DA1198		Damper and pulley arrangement includes PTO flange, adapter and mounting.
1	127316	Washer, Plain	6	5/8 inch
2	212112	Flange, Power Takeoff	1	
3	212113	Screw, Twelve Point Cap	6	5/8 - 18 x 2 1/4 inch
4	217323	Damper, Vibration	1	
5	3036052	Adapter, Crankshaft	1	
6	3064230	Pulley, Crankshaft	1	

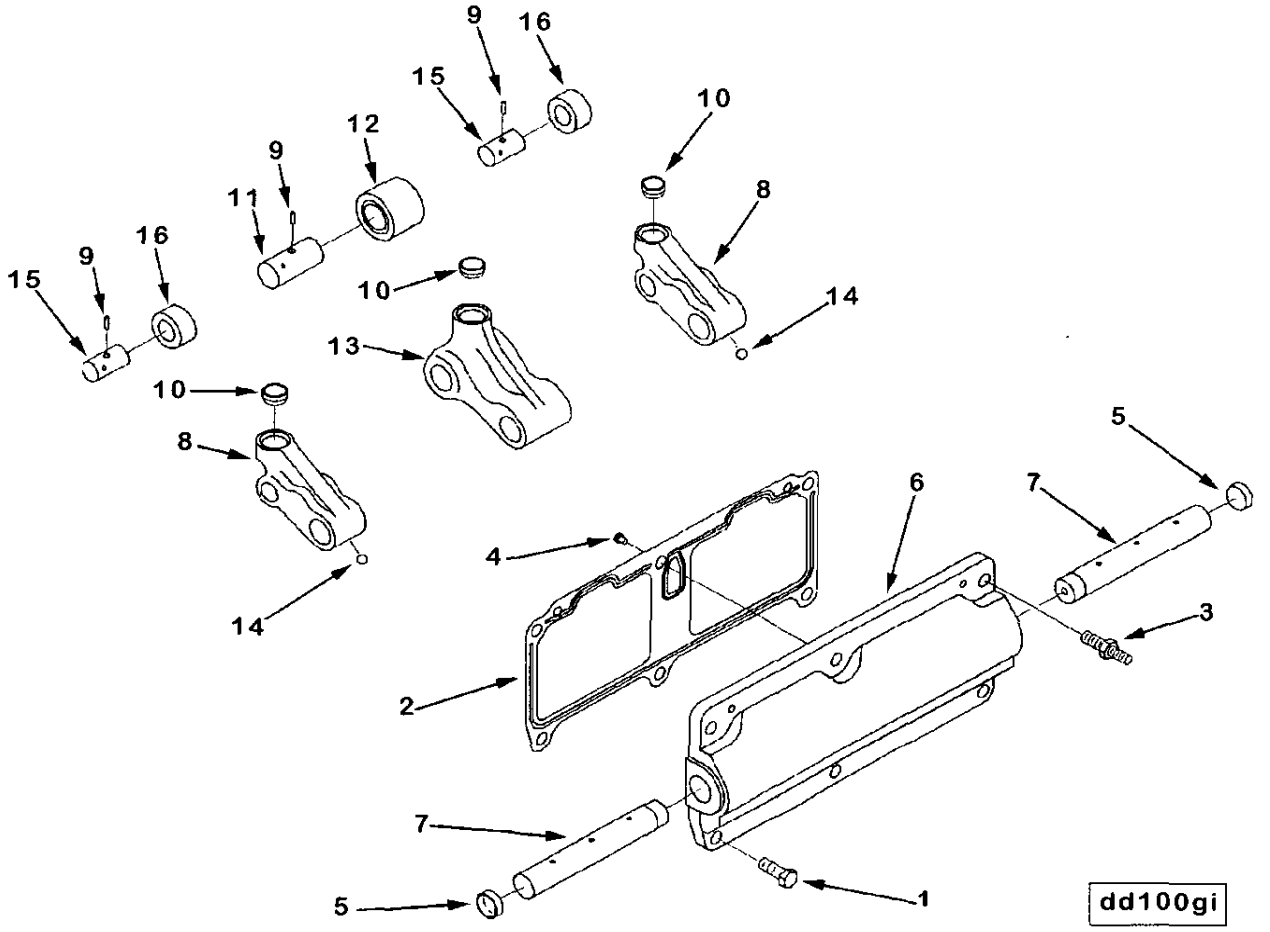
9
16
15
12
10
9
11
8
16
9
15
10
14
13
10
8
5
6
7
4
14
3
2
7
5
1
dd100gi

Ref No.	Part Number	Part Name	Req	Remarks
		CAM FOLLOWER		
		OPTION DD1709		Cam follower housing assemblies and mounting for use with no compressor.
1	S-120-A	Screw, Hexagon Head Cap	6	3/8 - 24 x 7/8 inch
2	3068473	Gasket, Cam Follower Hsg	3	
3	3081278	Screw, Hexagon Head Cap	12	
	3865239	Housing, Cam Follower	3	
4	69736	Screw, Lock	2	
5	205401	Plug, Expansion	2	
6	3055280	Housing, Cam Follower	1	
7	3066217	Shaft, Cam Follower	2	
8	3083945	Lever, Cam Follower	2	
9	3064309	Pin, Roll	1	
10	3064621	Socket, Cam Follower	1	
11	3074164	Pin, Cam Follower Roller	1	
12	3895489	Roller, Cam Follower	1	
13	3865238	Lever, Cam Follower	4	
9	3064309	Pin, Roll	1	
10	3064621	Socket, Cam Follower	1	
14	3067941	Plug, Ball	1	
15	3075027	Pin, Cam Follower Roller	1	
16	3865237	Roller, Cam Follower	1	

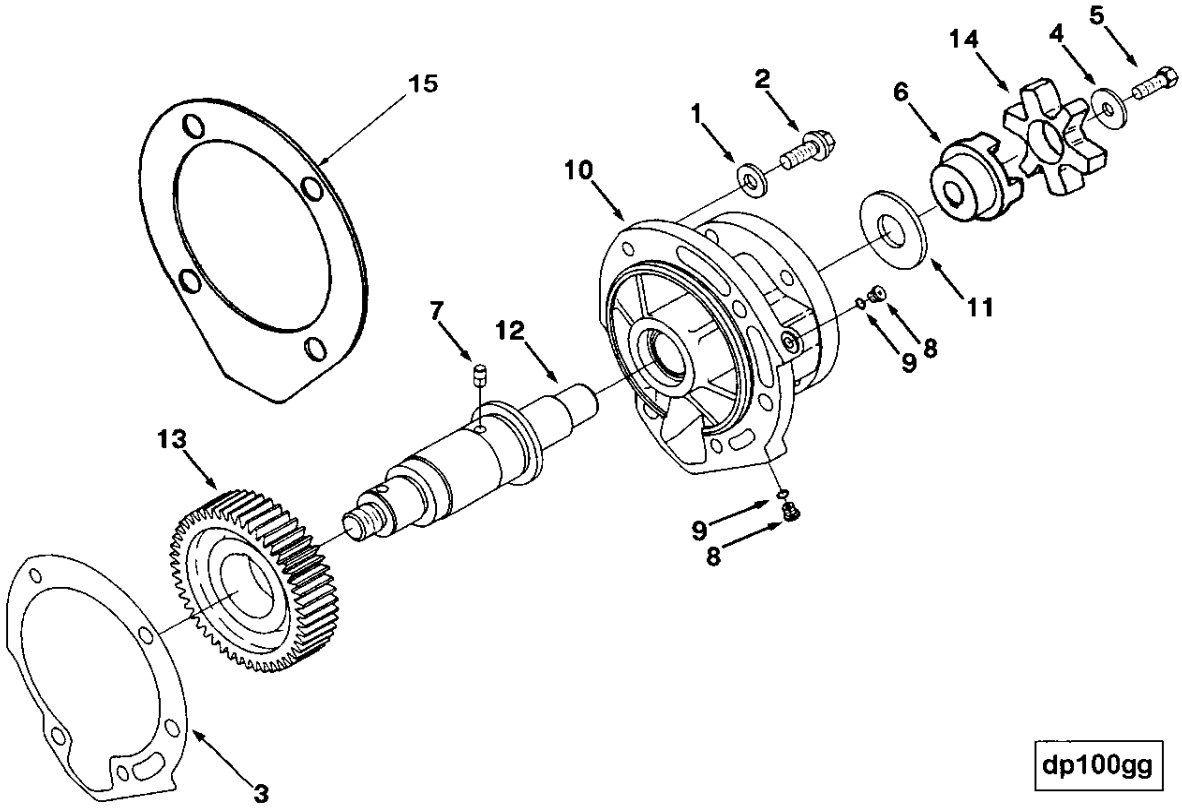
15
2
1
10
14
4
5
6
11
7
12
8
9
13
9
8
3
dp100gg

Ref No.	Part Number	Part Name	Req	Remarks
		FUEL PUMP DRIVE		
		OPTION DP1701		Accessory drive and mounting for engines without air compressors. Includes HCR spur gear and large accessory drive shaft.
1	70880	Washer, Plain	1	3/8 inch
2	3049670	Screw, Captive Washer Cap	5	7/16 - 20 x 1 1/4 inch
3	3076225	Gasket, Acc Drive Support	1	
	3088845	Assembly, Accessory Drive	1	
4	170664	Washer, Plain	1	3/8 inch
5	3000173	Screw, Hexagon Head Cap	1	3/8 - 16 x 1 inch
6	3000175	Hub, Jaw Coupling	1	
7	3034438	Pin, Groove	1	
	3067987	Housing, Accessory Drive	1	
8	3033742	Plug, Threaded	2	5/16 - 24 UNF
9	3034412	Seal, O Ring	2	
10	3072367	Support, Accessory Drive	1	
11	3072316	Washer, Plain	1	1 1/32 inch
12	3076500	Shaft, Accessory Drive	1	
13	3078310	Gear, Accessory Drive	1	
14	3046200	Spider, Jaw Coupling	1	
15	211031	Spacer, Accessory Drive	1	

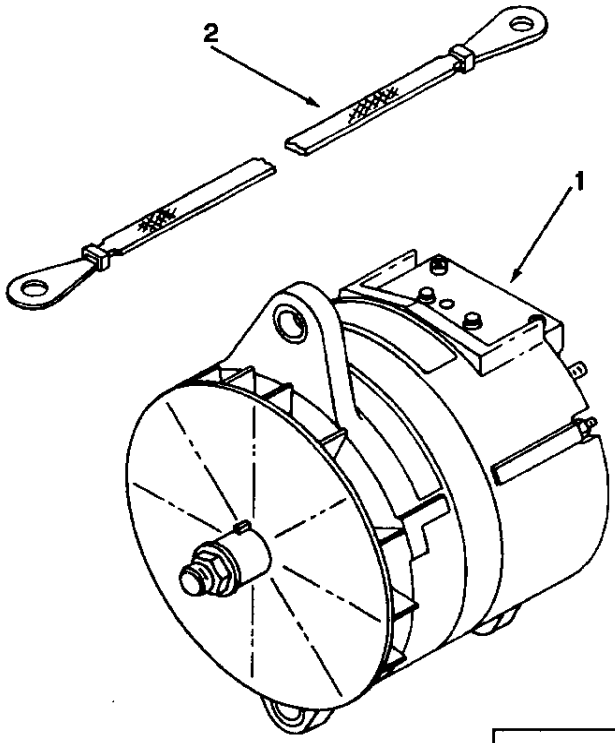

ea200ge

Ref No.	Part Number	Part Name	Req	Remarks
		ALTERNATOR		
		OPTION EE1215		
				Manufacturer/Model: Delco Remy 30 SI 400. Voltage: 24 volt Amperage: 100 Ground Type: Negative Insulated: No Built in Voltage Reglator: Yes Unique characteristics: Marine corrosion resistant.
1	3072483	Alternator	1	
2	3202162	Wire, Ground	1	

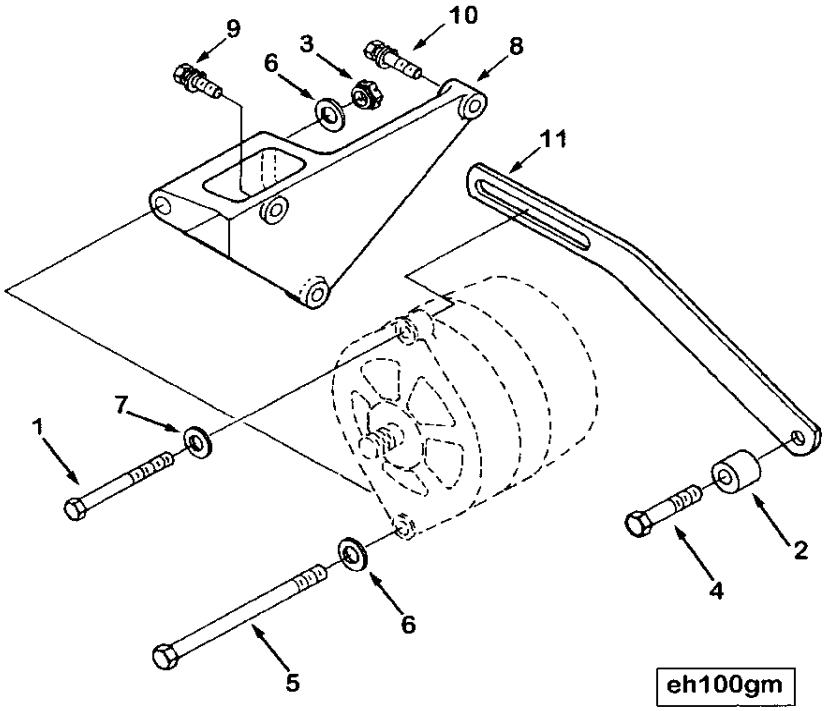
9
10
3
8
6
11
7
1
2
4
6
5
eh100gm

Ref No.	Part Number	Part Name	Req	Remarks
		ALTERNATOR MOUNTING		
		OPTION EH1029		Mounting for Delco and Leece Neville alternator used only with pad type front engine support. Contains 'dog leg' adjusting link.
1	S-116	Screw, Hexagon Head Cap	1	
2	68367-C	Spacer, Lub Oil Filter	1	
3	70897	Nut, Lock	1	
4	106289	Screw, Hexagon Head Cap	1	
5	158829	Screw, Hexagon Head Cap	1	
6	203310	Washer, Plain	3	
7	203760	Washer, Plain	1	
8	218505	Support, Alternator	1	
9	3012471	Screw, Captive Washer Cap	1	
10	3012472	Screw, Captive Washer Cap	2	
11	3029085	Link, Adjusting	1	

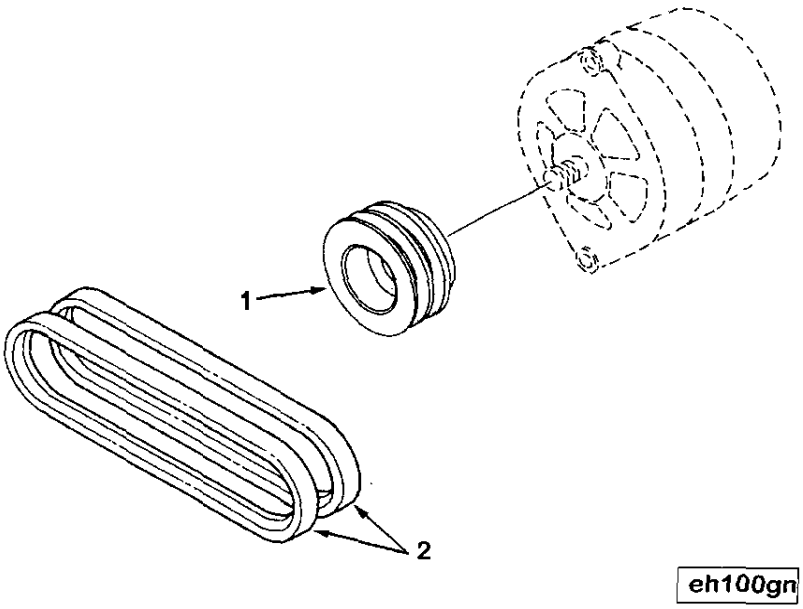

Ref No.	Part Number	Part Name	Req	Remarks
		ALTERNATOR DRIVE PULLEY		
		OPTION EH1702		Dual 0.515 inch V belt alternator drive pulley with 2 x 46 inch belts. For use with Cummins supplied alternator.
1	213326	Pulley, Alternator	1	
2	3040303	Belt, V	2	

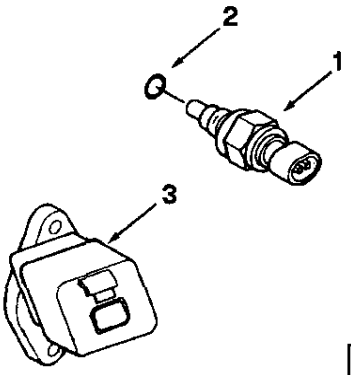

ei100gd

Ref No.	Part Number	Part Name	Req	Remarks
		ENGINE INSTRUMENT		
		OPTION EI1008		Oil pressure and temperature sensor used on Celect.
1	3865312	Sensor, Temperature	1	Coolant
	(3865323)	Sensor, Temperature	1	
2	3037537	Seal, O Ring	1	
3	3080406	Sensor, Pressure	1	Oil
	(3083716)	Sensor, Pressure	1	
	3037537	Seal, O Ring	1	

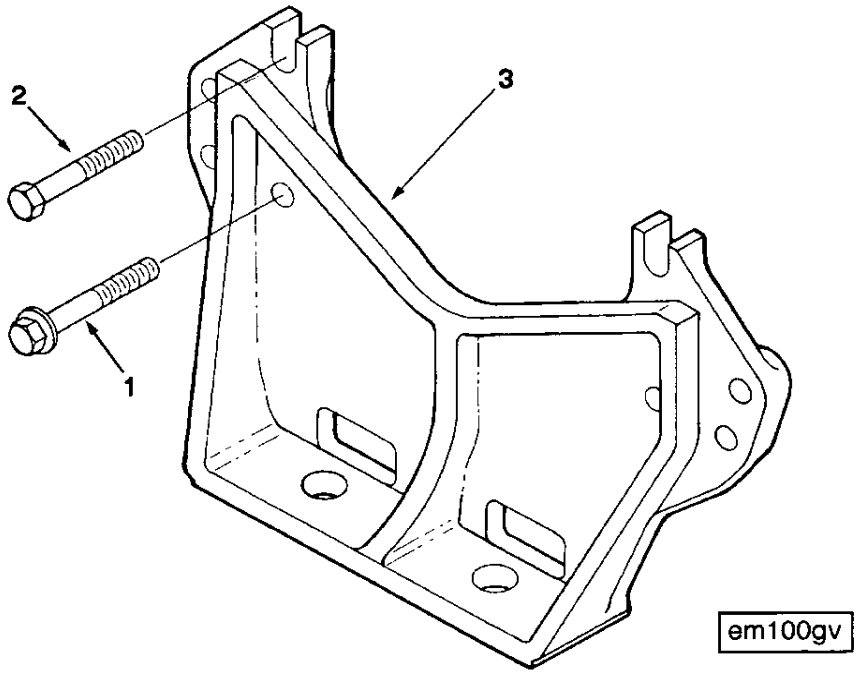

Ref No.	Part Number	Part Name	Req	Remarks
		FRONT ENGINE SUPPORT		
		OPTION EM1253		Front support and mounting to gear cover with narrow span two hole pad type mounting surface located 8 inches (203 MM) below crank centerline.
1	3058664	Screw, Hexagon Head Cap	2	7/16 - 20 x 2 1/2 inch
2	3054889	Screw, Hex Flange Head Cap	6	7/16 - 20 x 2 3/4 inch
3	3063029	Support, Front Engine	1	

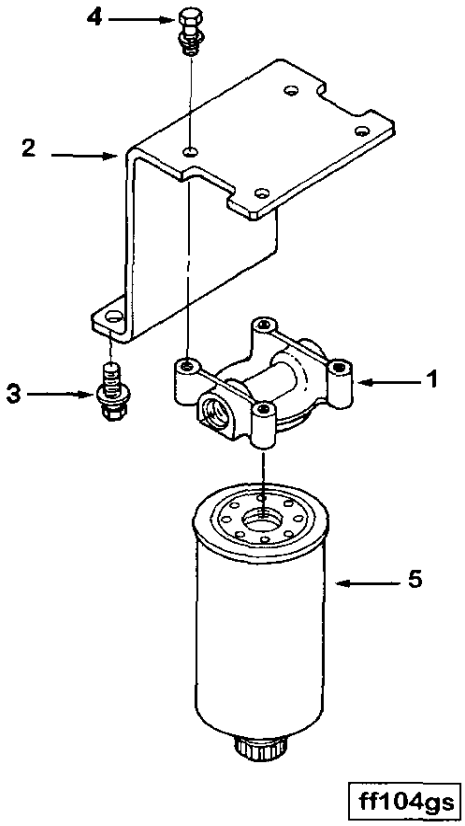
4
2
3
1
5
ff104gs

Ref No.	Part Number	Part Name	Req	Remarks
		FUEL FILTER		
		OPTION FF1198		Spring spin-on fuel/water separator mounted on pan rail with 45 degree fuel cooling plate inlet fitting and straight fuel cooling plate outlet fitting.
1	142784	Head, Fuel Filter	1	
2	198953	Bracket, Filter	1	
3	3008069	Screw, Captive Washer Cap	2	
4	3010596	Screw, Captive Washer Cap	4	3/8 - 16 x 1 1/4 inch
5	3315843	Separator, Fuel Water	1	

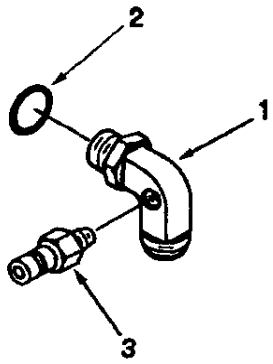

fp102gd

Ref No.	Part Number	Part Name	Req	Remarks
		FUEL PUMP INLET FITTING		
		OPTION FF1739		90 degree elbow fitting to fuel pump. Includes compuchek fitting.
	3061414	Fitting, Fuel Pump	1	
1	203849	Elbow, Male Union	1	
2	3046201	Seal, O Ring	1	
3	3042618	Nipple, Coupling	1	

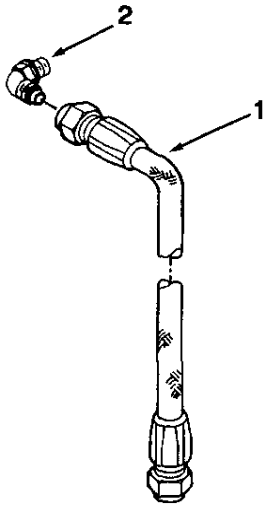

fe100gl

Ref No.	Part Number	Part Name	Req	Remarks
		FUEL FILTER PLUMBING		
		OPTION FF1778		Fuel filter plumbing for use when filters mount on the oil pan ledge. For use when no compressor is fitted on the engine.
1	AK10018-SS	Hose, Flexible	1	
2	129859	Elbow, Male Union	1	

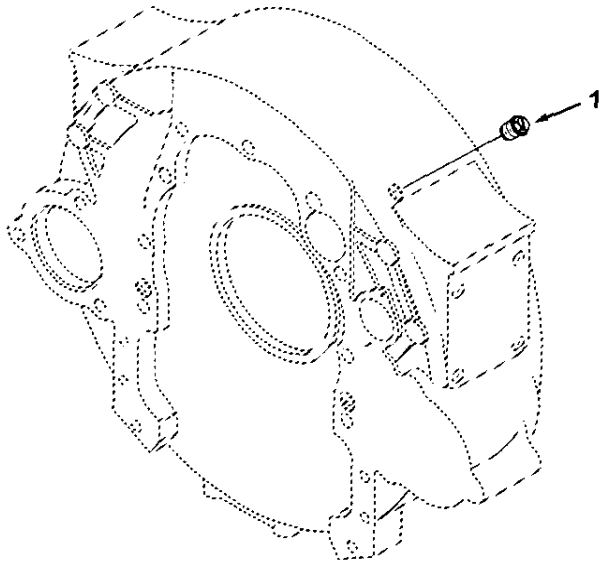

fh103gc

Ref No.	Part Number	Part Name	Req	Remarks
		FLYWHEEL HOUSING PLUMBING OPTION FH1714		
1	3063779	Plug, Threaded	1	3/4 inch - 16 UNF plastic plug for "plugging off" the magnetic pick-up provision on the flywheel housing. *For use on dry housing only.* Offers 3/4 inch thread penetration.

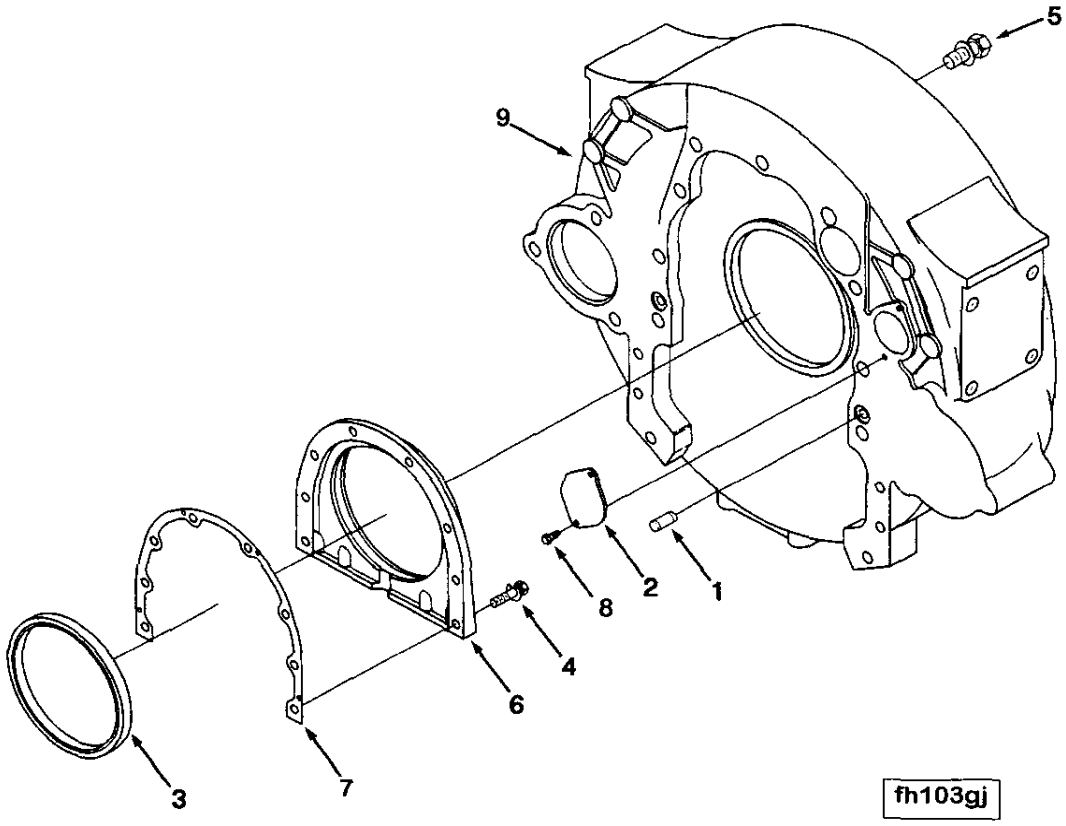
5
9
8
2
1
4
6
3
7
fh103gj

Ref No.	Part Number	Part Name	Req	Remarks
		FLYWHEEL HOUSING		
		OPTION FH11033		Cast iron SAE No. 1 flywheel housing with mounting pads for 0 degree tilt. Starter mounting at 76 degrees from vertical in No. 2 quadrant.
1	60408	Dowel, Pin	2	
2	70657	Cover, Access Hole	1	
3	3006737	Seal, Oil	1	
4	3010594	Screw, Captive Washer Cap	8	3/8 - 24 x 1 1/2 inch
5	3048353	Screw, Captive Washer Cap	9	
6	3049018	Cover, Rear	1	
7	3067616	Gasket, Rear Cover	1	
8	3011342	Screw, Captive Washer Cap	2	
9	3081219	Housing, Flywheel	1	

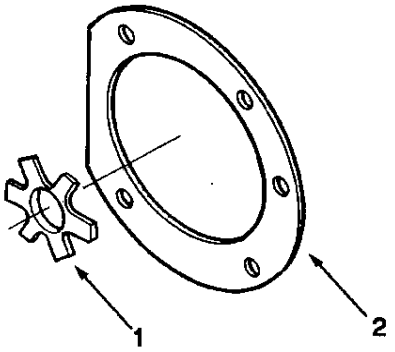

fp103gx

Ref No.	Part Number	Part Name	Req	Remarks
		FUEL PUMP COUPLING		
		OPTION FP1498		ECI fuel pump mounting and drive coupling.
1	3046200	Spider, Jaw Coupling	1	
2	3076228	Gasket, Fuel Pump	1	

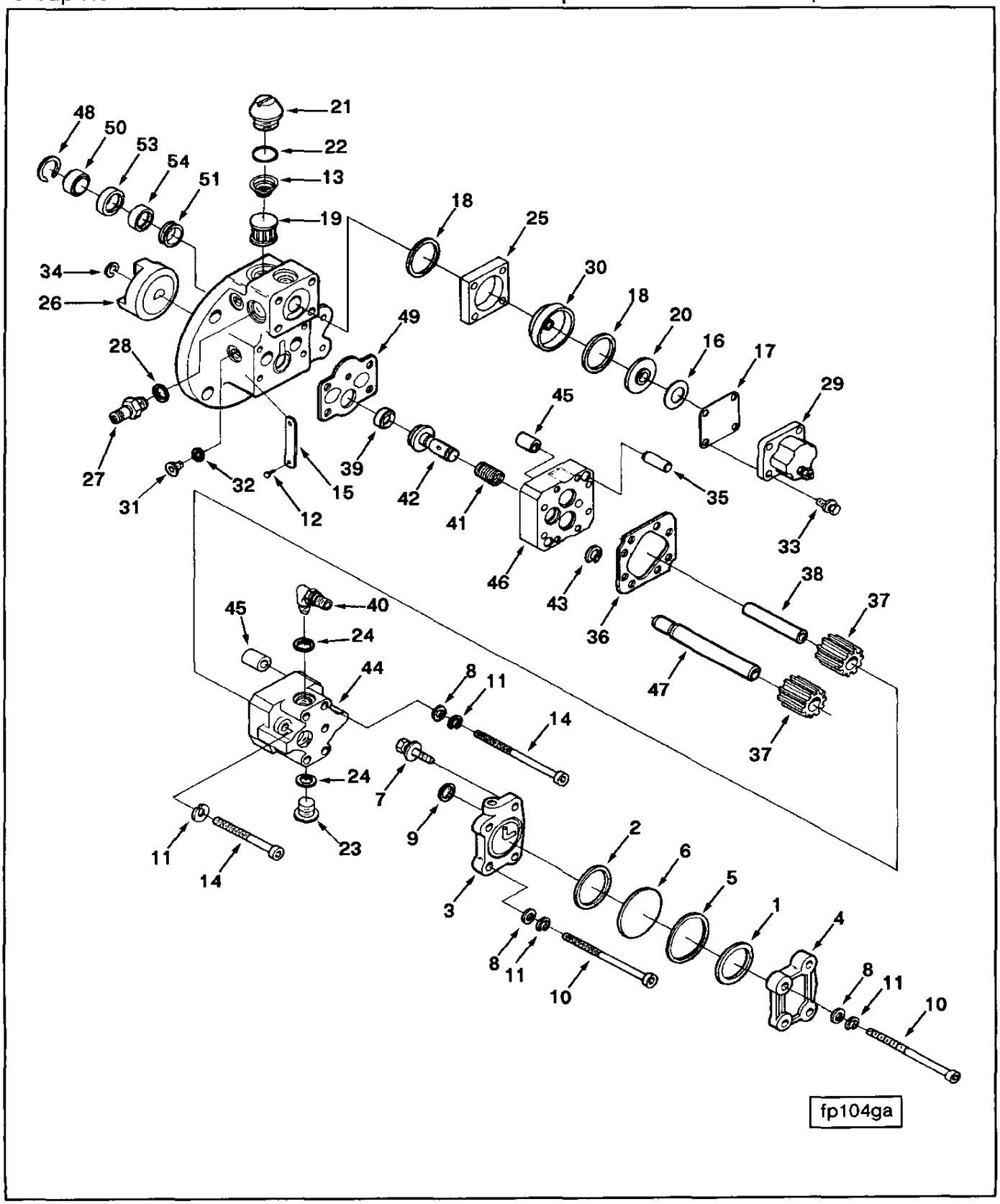
48
50
53
54
51
21
22
13
19
18
25
30
18
20
16
17
29
34
26
49
28
27
31
32
12
15
39
42
41
45
46
43
36
35
33
38
37
47
37
45
40
24
44
8
11
14
24
7
9
23
11
14
3
2
6
5
1
4
8
11
10
8
11
10
fp104ga

Ref No.	Part Number	Part Name	Req	Remarks
		CELECT FUEL PUMP		
		OPTION FP10111		Celect fuel pump. Non- mounted filter with pump cooling drain line to be oriented 30 degrees relative to back face of gear pump.
	BM-76340	Damper, Fuel Pump	1	
1	100099	Seal, Rectangular Ring	1	
2	139988	Seal, Rectangular Ring	1	
3	153336	Body	1	
4	153338	Cover, Fuel Pump Damper	1	
5	160514	Washer, Plain	1	1 11/16 inch
6	202897	Diaphragm,fuel Pump Damper	1	
7	3017051	Screw, Captive Washer Cap	2	1/4 - 20 x 1 1/8 inch
8	70704	Washer, Plain	2	1/4 inch
9	151900	Seal, Rectangular Ring	1	
10	153346	Screw, Socket Head Cap	2	1/4 - 20 x 4 inch
11	181466	Washer, Lock	2	1/4 inch
	3085406	Pump, Fuel		
12	S-2286	Screw, Drive	2	3/16 inch
13	70700	Spring, Compression	1	
14	100129	Screw, Socket Head Cap	6	1/4 - 20 x 3 inch
15	105375	Nameplate	1	
16	129768	Spring, Valve	1	
17	129839	Shield, Shutoff Valve	1	
18	129888	Seal, Rectangular Ring	1	
19	146483	Screen, Filter	1	
20	196057	Disc, Valve	1	
21	3014575	Cap, Fuel Pump Filter	1	
22	3021123	Seal, O Ring	1	
23	3033742	Plug, Threaded	1	
24	3034412	Seal, O Ring	1	
25	3034451	Housing, Actuator	1	
26	3041572	Hub, Jaw Coupling	1	
27	3042619	Nipple, Coupling	1	
28	3037537	Seal, O Ring	1	
29	3054609	Solenoid	1	
30	3056009	Disc, Actuator	1	
31	3056416	Plug, Threaded	4	5/16 - 24 UNF
32	3056415	Seal, O Ring	4	
33	3065944	Screw, Captive Washer Cap	4	#10 - 24 x 1 inch
34	3068768	Ring, Retaining	1	

Continued

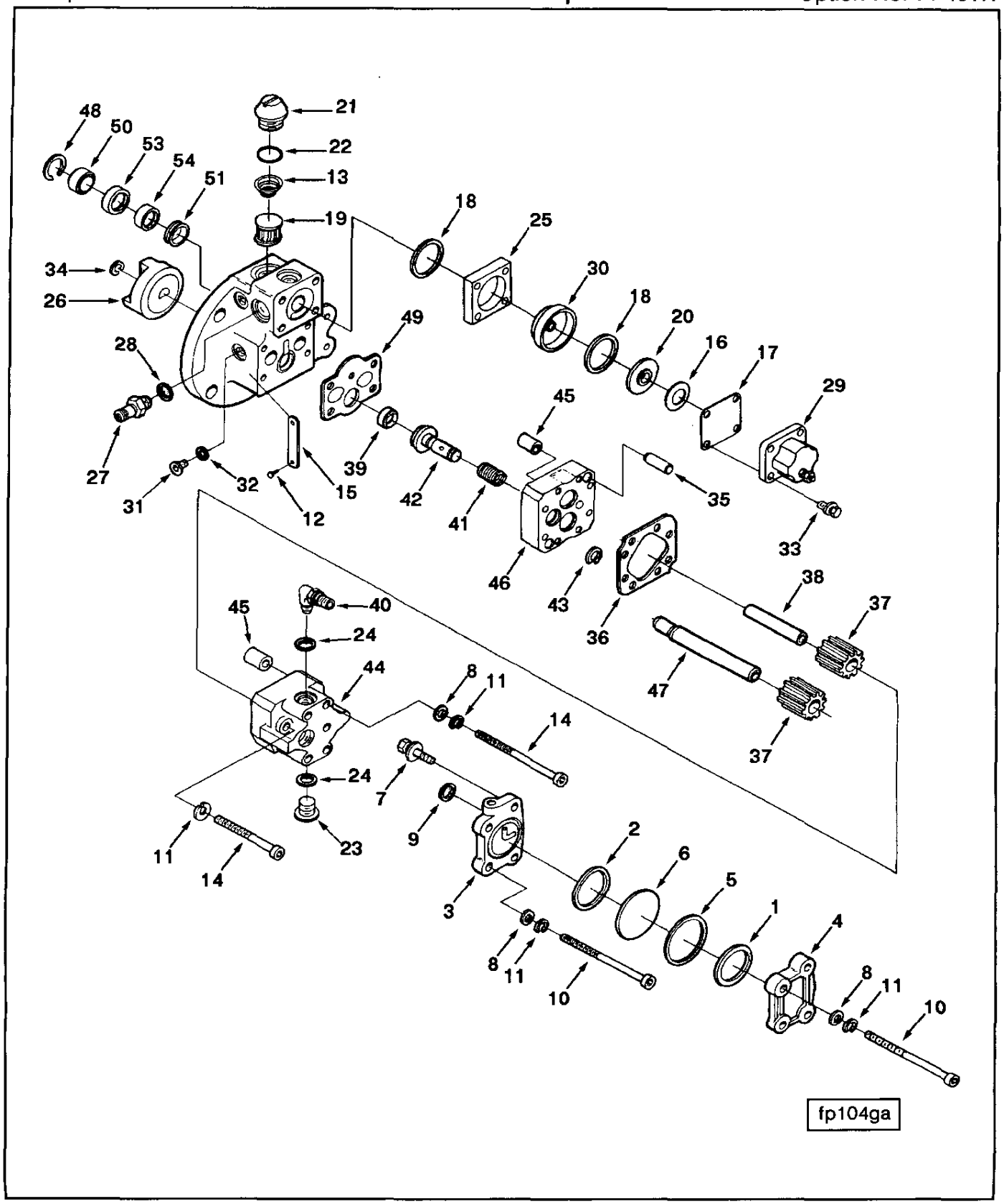
48
50
53
54
51
21
22
13
19
18
25
30
18
20
16
17
29
34
26
28
27
31
32
12
15
39
42
41
49
45
46
43
36
35
33
38
37
47
37
45
40
24
44
8
11
14
24
7
9
23
11
14
3
2
6
5
1
4
8
11
10
8
11
10
fp104ga

Ref No.	Part Number	Part Name	Req	Remarks
		CELECT FUEL PUMP		
		OPTION FP10111		
	3085404	Pump, Gear Fuel	1	
35	64816-A	Dowel, Pin	2	
36	110855	Gasket, Fuel Pump	1	
11	181466	Washer, Lock	4	1/4 inch
	3019617	Gear & Shaft	1	
37	119364	Gear, Fuel Pumping	1	
38	175865	Shaft, Fuel Pump	1	
39	3033719	Dowel, Ring	1	
40	3033740	Valve, Check	1	
24	3034412	Seal, O Ring	1	
41	3085614	Spring, Compression	1	
42	3085613	Plunger,prs Regulator	1	
43	3085615	Ring, Retaining	1	
	3068889	Pump, Gear Fuel	1	
8	70704	Washer, Plain	2	1/4 inch
14	100129	Screw, Socket Head Cap	2	1/4 - 20 x 3 inch
44	(3033714)	Housing, Fuel Pump Gear	1	
45	3033724	Bushing	2	
46	3068770	Cover, Fuel Pump Gear	1	
	(3068762)	Cover, Fuel Pump Gear	1	
	3068891	Gear & Shaft	1	
37	119364	Gear, Fuel Pumping	1	
47	3068763	Shaft, Fuel Pump Drive	1	
	3803493	Kit, Fuel Pump Support	1	
48	128807	Ring, Retaining	1	
49	3080837	Gasket, Fuel Pump	1	
50	3074317	Spacer, Seal	1	
51	3074316	Spacer, Seal	1	
52	3075338	Support, Fuel Pump	1	
	3803477	Kit, Oil Seal	1	
53	3045846	Seal, Oil	1	
54	3071643	Seal, Oil	1	

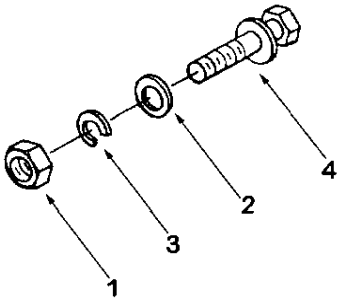

fp104gu

Ref No.	Part Number	Part Name	Req	Remarks
		FUEL PUMP MOUNTING		
		OPTION FP10151		Mounting hardware for fuel pump on engine without an air compressor.
1	S-274	Nut, Heavy Hexagon Jam	2	7/16 - 14 UNC
2	69324	Washer, Plain	2	3/8 inch
3	135783	Washer, Lock	2	7/16 inch
4	3818599	Screw, Captive Washer Cap	2	7/16 - 14 x 1 7/8 inch

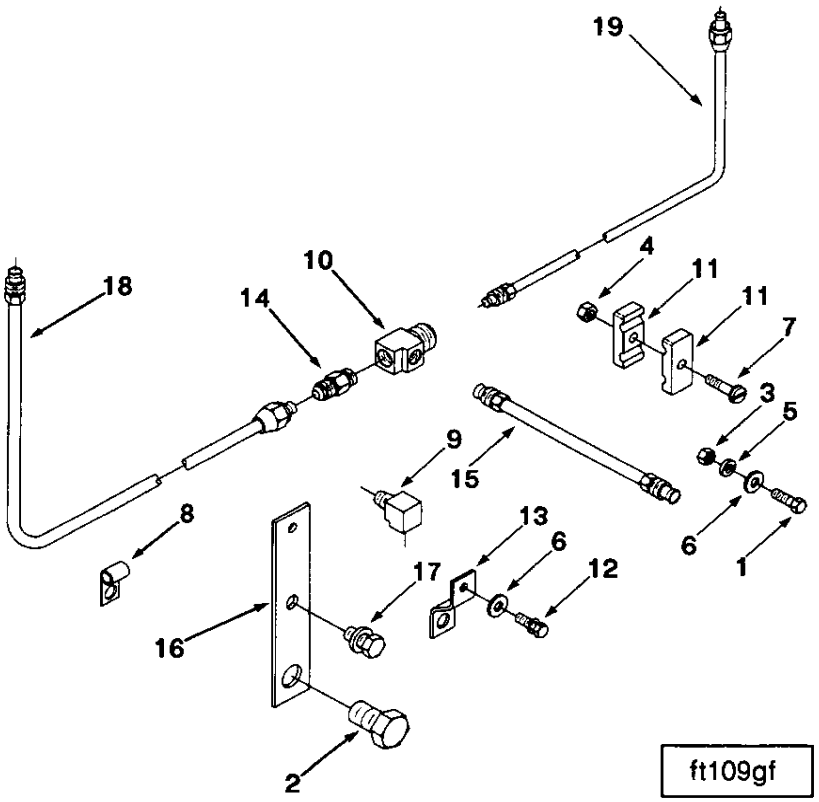
19
18
10
14
4
11
11
7
3
5
9
15
8
13
6
12
17
16
6
1
2
ft109gf

Ref No.	Part Number	Part Name	Req	Remarks
		FUEL PLUMBING		
		OPTION FT10139		Fuel tubing for 96 industrial engines less air compressor, with celect fuel pump. Drain location DL1031.
1	S-114	Screw, Hexagon Head Cap	1	
2	S-190	Screw, Hexagon Head Cap	1	
3	S-224	Nut, Heavy Hexagon	1	
4	S-251	Nut, Regular Hexagon Jam	1	
5	S-600	Washer, Lock	1	
6	S-631	Washer, Plain	2	
7	S-1315	Screw, Pan Head Cap	1	
8	180372	Clip	4	
9	181213	Elbow, Plain Adapter	2	
10	203863	Tee, Male Run	1	
11	3007025	Clamp, Tube	2	
12	3013904	Screw, Captive Washer Cap	1	
13	3033098	Brace, Tube	1	
14	3036865	Union, Male	1	
15	3053778	Tube, Fuel Bypass	1	
16	3065109	Brace, Tube		
17	3069120	Screw, Captive Washer Cap	1	
18	3076266	Tube, Fuel Supply	1	
19	3087782	Tube, Fuel Bypass	1	

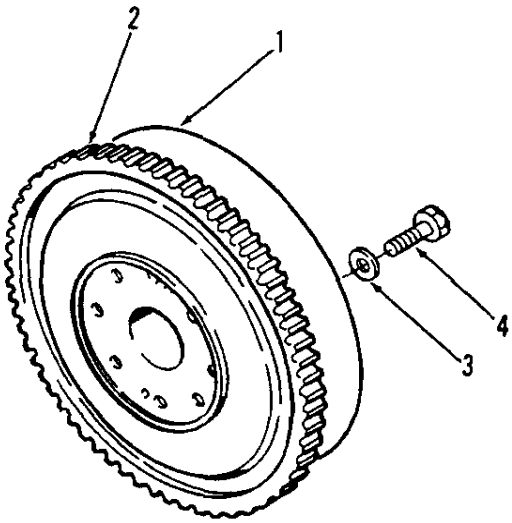

fw100ga

Ref No.	Part Number	Part Name	Req	Remarks
		FLYWHEEL		
		OPTION FW1199		SAE #1 flywheel without machined pilot. Has 13.88 (353MM) major pilot. For use with Ingersoll-Rand drive ring. First released for Mexico.
	3023816	Flywheel	1	
1	(199499)	Flywheel	1	
2	4851	Gear, Flywheel Ring	1	
3	200861	Washer, Plain	6	
4	3011833	Screw, Head Locking	6	

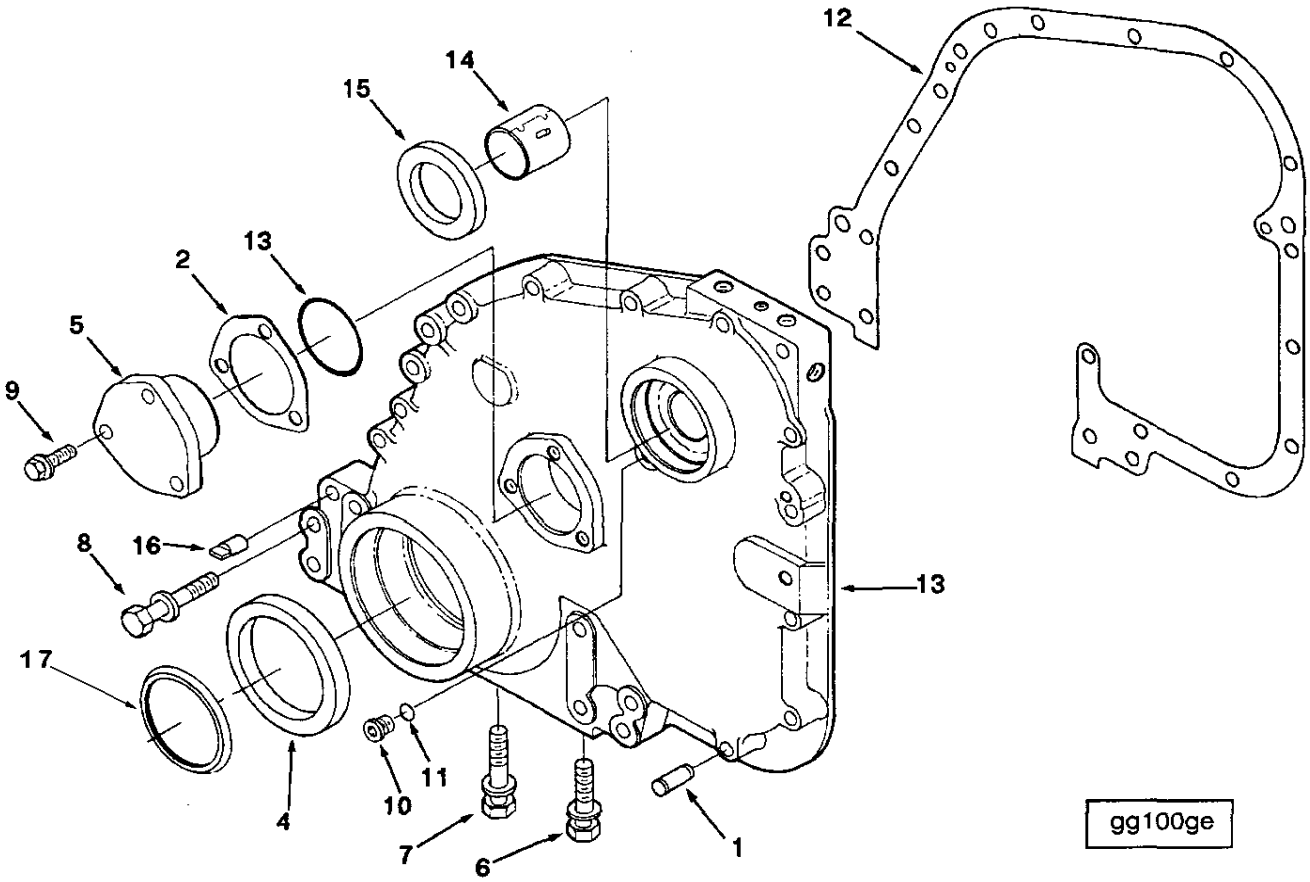
12
14
15
13
2
5
9
8
16
13
17
11
10
4
7
6
1
gg100ge

Ref No.	Part Number	Part Name	Req	Remarks
		FRONT GEAR COVER		
		OPTION GG1701		Front gear cover and mounting . Camshaft support and mounting. Requires straight thread o-ring plug for timing hole with large accessory drive shaft.
1	60408	Dowel, Pin	1	
2	65259-A	Shim	1	.010 inch
2	65259-B	Shim	1	.005 inch
2	65259-C	Shim	1	.002 inch
2	185573	Shim	3	.025 inch
3	215705	Seal, O Ring	1	
4	3006736	Seal, Oil	1	
5	3008530	Support, Camshaft Thrust	1	
6	3011712	Screw, Captive Washer Cap	9	7/16 - 20 x 2 3/16 inch
7	3011713	Screw, Captive Washer Cap	1	7/16 - 20 x 2 5/8 inch
8	3011714	Screw, Captive Washer Cap	3	7/16 - 20 x 3 inch
9	3011715	Screw, Captive Washer Cap	3	3/8 - 16 x 1 3/16 inch
10	3037536	Plug, Threaded	1	9/16 - 18 UNF
11	3037537	Seal, O Ring	1	
12	3067618	Gasket, Gear Cover	1	
13	3076496	Cover, Gear	1	
	(3078274)	Cover, Gear	1	
14	3076091	Bushing	1	
15	3078292	Seal, Oil	1	
16	70653	Dowel	1	
17	3076203	Seal, Dust	1	

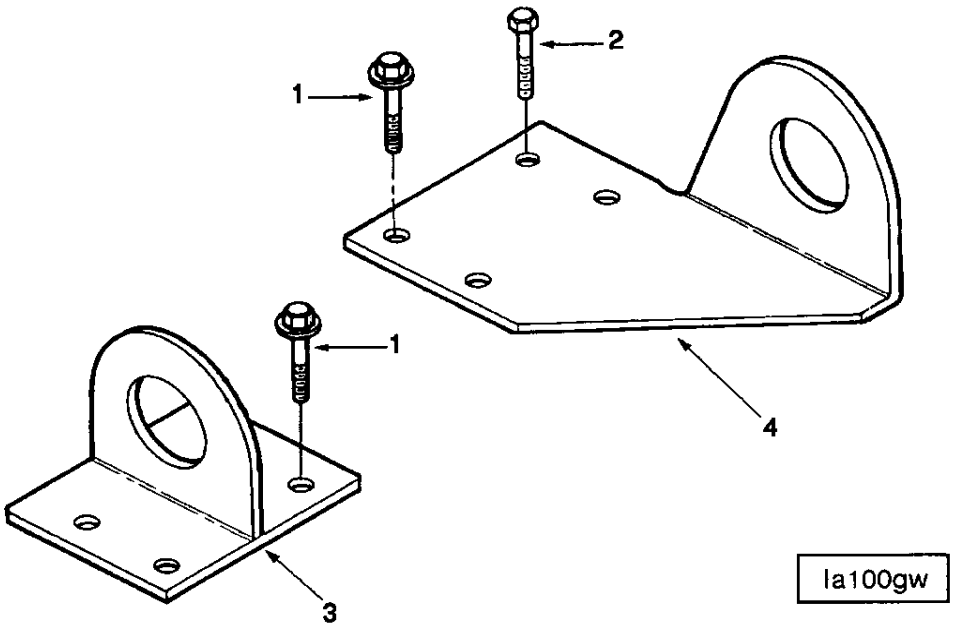

Ref No.	Part Number	Part Name	Req	Remarks
		LIFTING BRACKET		
		OPTION LA1061		Lifting arrangement with mounting brackets on front and rear of engine.
1	3069633	Screw, Captive Washer Cap	5	1/2 - 13 x 1 3/8 inch
2	3070526	Screw, Hexagon Head Cap	1	
3	3069629	Bracket, Lifting	1	Front
4	3072357	Bracket, Lifting	1	Rear

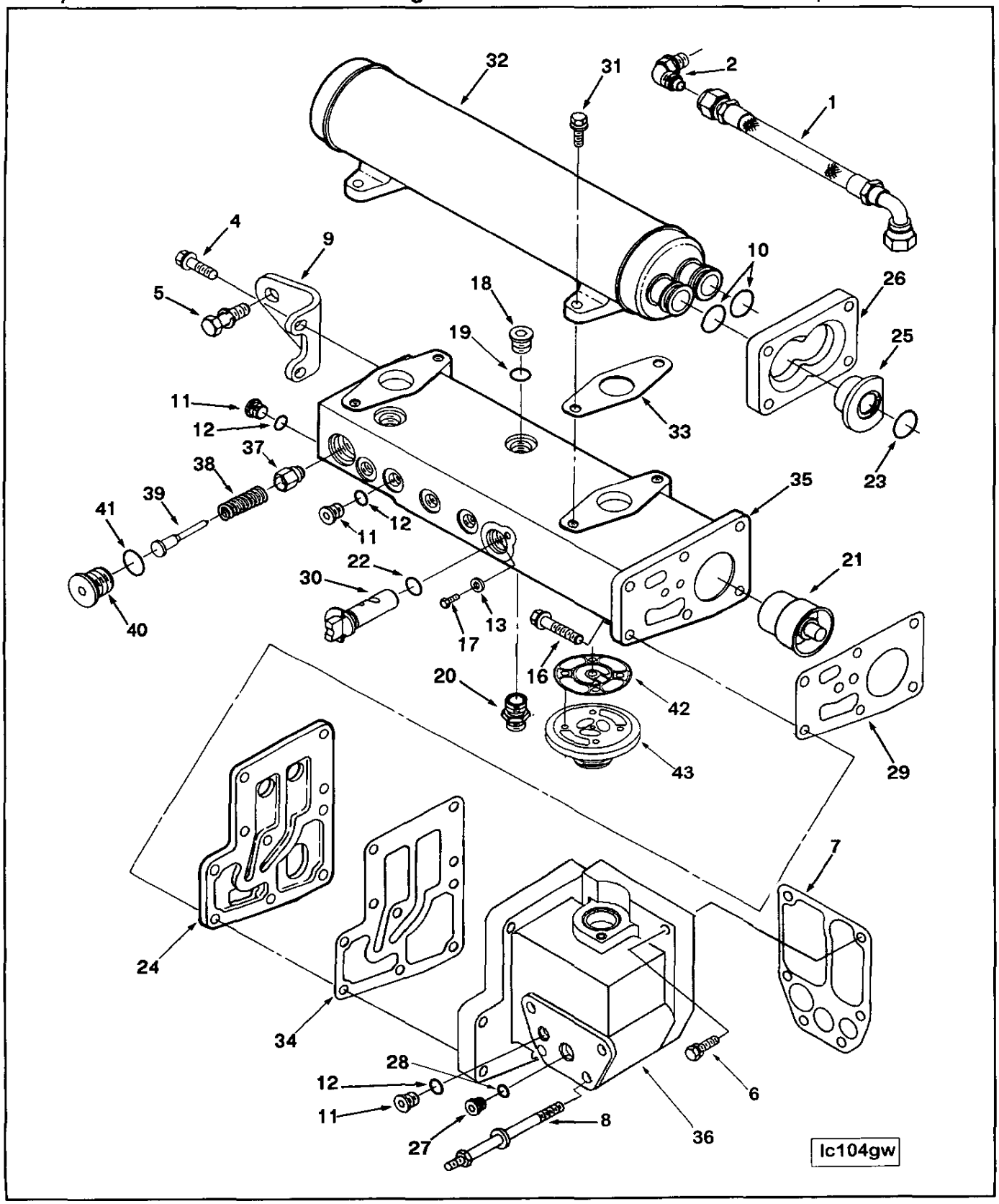
32
31
2
1
4
9
10
5
18
26
19
25
11
12
33
37
38
35
23
39
41
12
11
22
21
30
13
17
40
16
20
42
43
29
7
24
34
28
12
6
11
8
27
36
lc104gw

Ref No.	Part Number	Part Name	Req	Remarks
		ENGINE OIL COOLER		
		OPTION LC1025		Industrial N14 oil cooler with integral coolant supply connection for aftercooler plumbing on jacket water aftercooled engines or aftercooler thermostat housing on engines with a 1 pump 2 loop cooling system. Suitable for ratings of 525 HP or less.
1	3035580	Hose, Flexible	1	
2	3037535	Elbow, Male Union	2	
4	3006182	Screw, Captive Washer Cap	2	3/8 - 16 x 7/8 inch
5	3063567	Screw, Captive Washer Cap	1	1/2 - 13 x 1 1/4 inch
6	3012473	Screw, Captive Washer Cap	2	3/8 - 16 x 1 3/4 inch
7	3066298	Gasket, Oil Cooler Support	1	
8	3067984	Screw, Captive Washer Cap	4	3/8 - 16 x 4 3/4 inch
9	3070501	Bracket, Oil Cooler	1	
	3088173	Assembly, Oil Cooler	1	
10	109080	Seal, O Ring	2	
11	3037536	Plug, Threaded	4	9/16 - 18 UNF
12	3037537	Seal, O Ring	4	
13	3077620	Washer, Plain	1	
16	3042889	Screw, Captive Washer Cap	10	3/8 - 16 x 1 7/8 inch
17	3061400	Screw, Socket Head Cap	1	1/4 - 20 x 1/2 inch
18	3046202	Plug, Threaded	2	3/4 - 16 UNF
19	3046201	Seal, O Ring	5	
20	206963	Adapter, Filter Head	1	
21	3078338	Thermostat	1	
22	3072397	Seal, O Ring	1	
23	3072375	Seal, Rectangular Ring	2	
24	3066277	Spacer, Cooler Support	1	
25	3069680	Adapter, O Ring	2	
26	3069681	Retainer, Connection	1	
27	3067424	Plug, Threaded	1	1/2 - 20 UNF
28	3037236	Seal, O Ring	1	
29	3072341	Gasket, Oil Trf Connection	1	
30	3072395	Shaft, Shutoff Valve	1	
31	3067955	Screw, Captive Washer Cap	4	5/16 - 18 x 1 1/8 inch
32	3078407	Cooler, Oil	1	
33	3069678	Gasket, Lub Oil Clr Hsg	2	
34	3070477	Gasket, Oil Cooler Support	1	
	3088172	Kit, Oil Cooler	1	
35	3072372	Connection, Oil Transfer	1	
36	3088932	Support, Oil Cooler	1	
37	3072301	Valve, Bypass	1	
38	3072302	Spring, Compression	1	
39	3072377	Plunger, Bypass Valve	1	
40	3072378	Plug, Threaded	1	
41	3046943	Seal, O Ring	1	
42	3070478	Gasket, Filter Head	1	
43	3918334	Head, Lub Oil Filter	1	

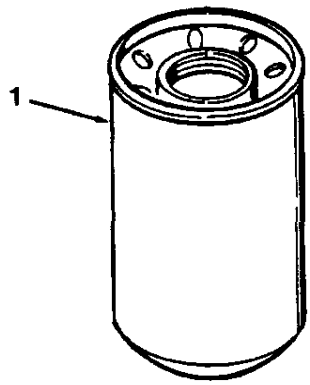

lf101gf

Ref No.	Part Number	Part Name	Req	Remarks
		FULL FLOW OIL FILTER		
		OPTION LF1173		Combination full flow and bypass lube oil "combo" engine mounted.
1	3318853	Element, Lub Oil Filter	1	

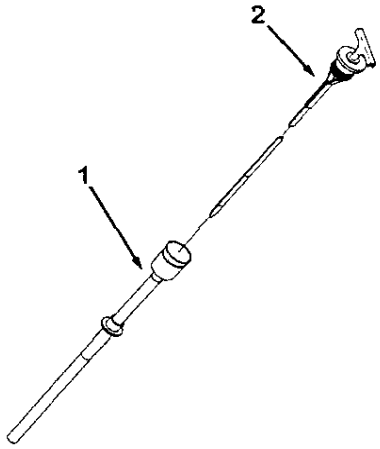

lg100gf

Ref No.	Part Number	Part Name	Req	Remarks
		OIL LEVEL GAUGE		
		OPTION LG1018		Dipstick and oil gauge tube. Dipstick calibrated for 9.6 U.S. gallons low and for 0 degree power and tilt angles. Oil gauge tube is 4.5 inches long. "Press fit" oil gauge tube.
1	101814	Tube, Oil Gauge	1	
2	216484	Dipstick	1	

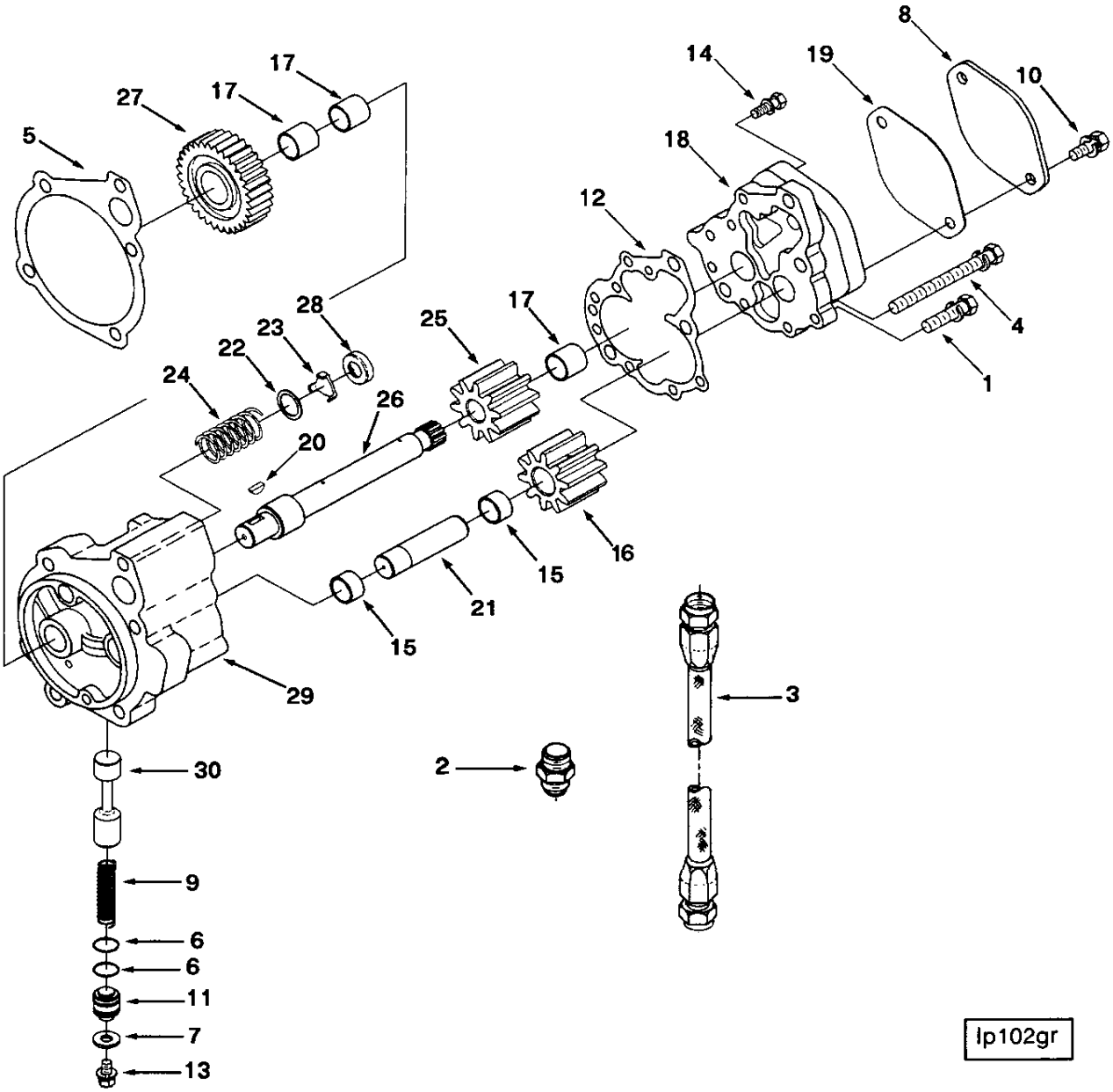
8
14
19
10
17
27
17
5
18
12
28
23
22
25
17
4
24
26
1
20
16
15
21
15
29
3
30
2
9
6
6
11
7
13
lp102gr

Ref No.	Part Number	Part Name	Req	Remarks
		LUBRICATING OIL PUMP		
		OPTION LP1705		Lubricating oil pump and mounting with oil temperature sensor for use on celect engines. Includes HCR spur gear and 2.0 lube pumping gear.
1	3034526	Screw, Captive Washer Cap	3	7/16 - 20 x 1 3/4 inch
2	3036866	Union, Male	1	
3	3082622	Hose, Flexible	1	
4	3067461	Screw, Captive Washer Cap	2	7/16 - 20 x 4 1/2 inch
	3609832	Pump, Lubricating Oil	1	
5	3067613	Gasket, Lub Oil Pump	1	
6	145504	Seal, O-ring	2	
7	146161	Washer, Plain	1	3/8 inch
8	204048	Plate, Cover	1	
9	3010146	Spring, Compression	1	
10	3010595	Screw, Captive Washer Cap	2	3/8 - 16 x 1 inch
11	3012726	Plug, Retainer	1	
12	3014778	Gasket, Lub Oil Pump Cover	1	
13	3022589	Screw, Captive Washer Cap	1	5/16 - 18 x 5/8 inch
14	3022590	Screw, Captive Washer Cap	7	5/16 - 18 x 1 inch
	3045622	Gear, Lub Oil Pumping	1	
15	68365	Bushing	2	
16	3045618	Gear, Lub Oil Pumping	1	
	3068461	Cover, Lub Oil Pump	1	
17	69521	Bushing	1	
18	(3068459)	Cover, Lub Oil Pump	1	
19	154916	Gasket, Hydraulic Pump	1	
	(3609828)	Pump, Lubricating Oil	1	
20	183695	Key, Plain Woodruff	1	
21	3012531	Shaft, Idler	1	
22	3014754	Washer, Plain	1	3/4 inch
23	3014755	Disc, Valve	1	
24	3014756	Spring, Compression	1	
25	3609888	Gear, Lub Oil Pumping	1	
26	3609825	Shaft, Lube Oil Pump	1	
27	3609824	Gear, Lubricating Oil Pump	1	
28	3087815	Plug, Retainer	1	
	3821577	Body, Lubricating Oil Pump	1	
29	(3087812)	Body, Lubricating Oil Pump	1	
17	69521	Bushing	2	
30	3884126	Plunger, Prs Regulator	1	

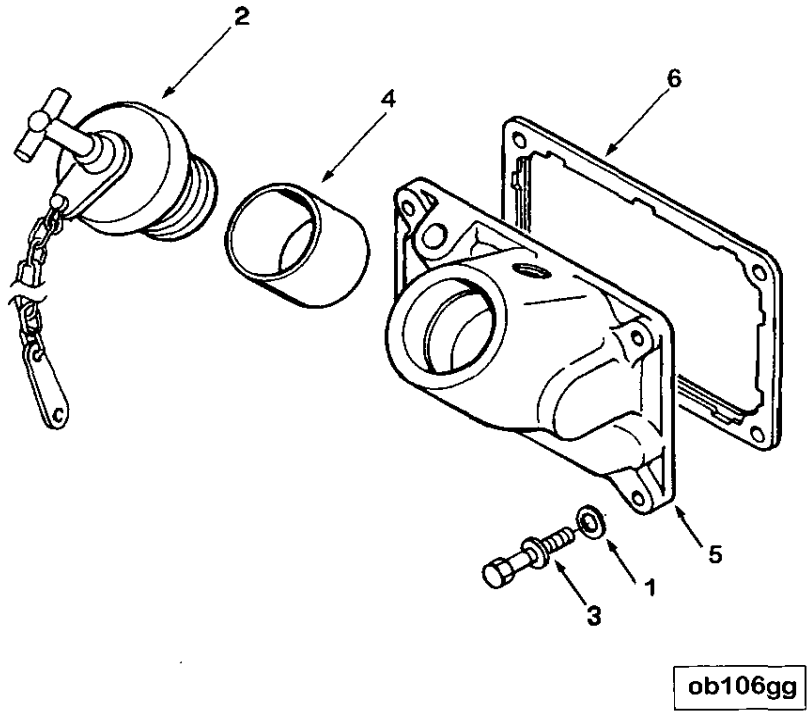

Ref No.	Part Number	Part Name	Req	Remarks
		CYLINDER BLOCK COVER		
		OPTION OB1341		Hand hole cover includes 7 inch oil fill tube. Has provision for "press fit" oil gauge tube.
1	S-602	Washer, Plain	4	
2	107981	Cap, Filler	1	
3	3010595	Screw, Captive Washer Cap	4	3/8 - 16 x 1 Inch
	3044968	Cover, Hand Hole	1	
4	65527	Tube, Oil Filler	1	
5	3044566	Cover, Hand Hole	1	
6	3068466	Gasket, Hand Hole	1	

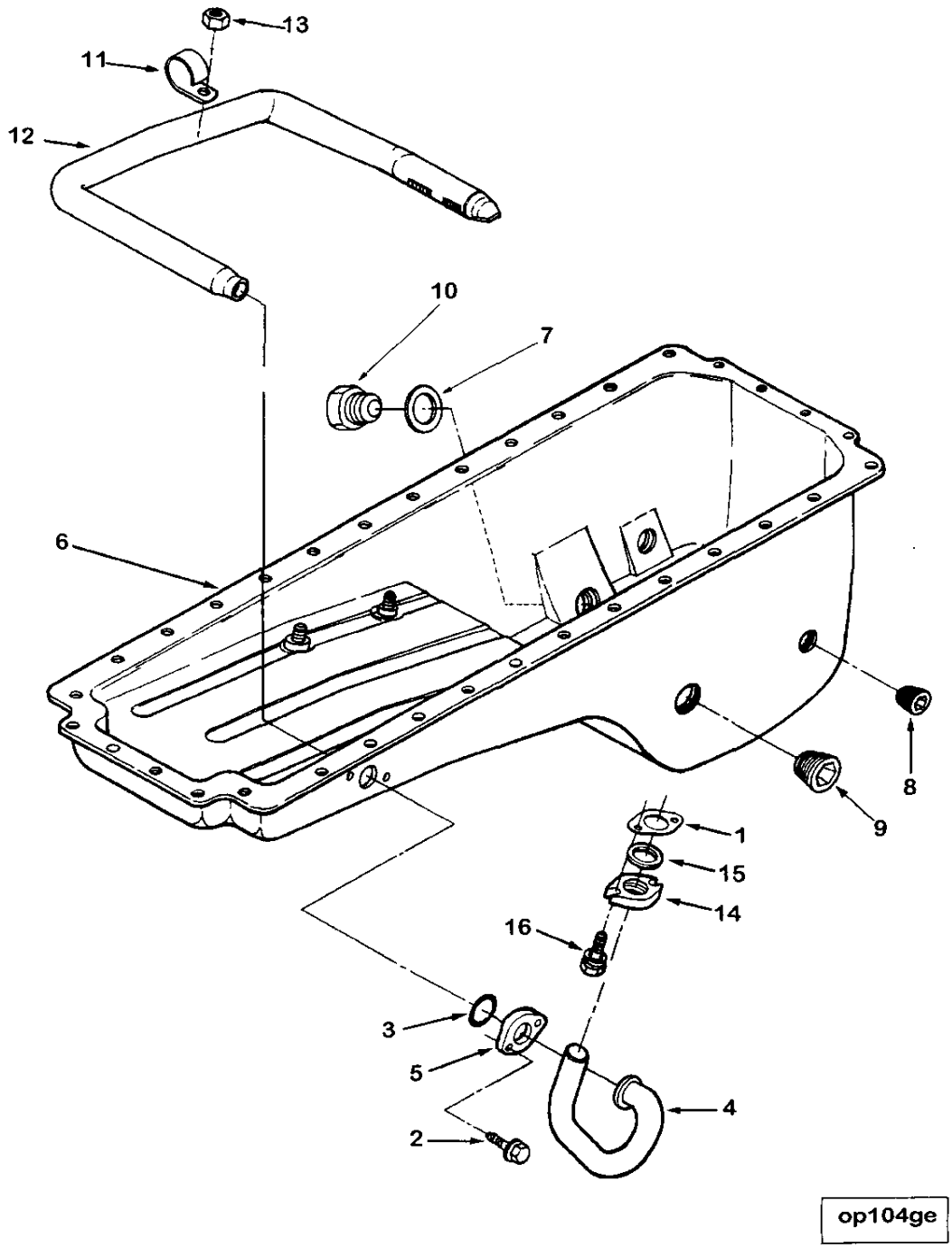
13
11
12
10
7
6
8
9
1
15
14
16
3
5
4
2
op104ge

Ref No.	Part Number	Part Name	Req	Remarks
		OIL PAN		
		OPTION OP1449		Stamped steel 9.5 gallon rear sump oil pan. Angularity limits; 45 degrees front down, 45 degrees front up, 45 degrees side to side. Oil pan mounting without noise panels.
1	157551	Gasket, Oil Suc Connection	1	
2	3010595	Screw, Captive Washer Cap	2	3/8 - 16 x 1 inch
3	3029847	Seal, O Ring	1	
4	3029848	Tube, Lub Oil Transfer	1	
5	3029850	Plate, Clamping	1	
	3031959	Assembly, Oil Pan		
6	(3030257)	Pan, Oil	1	
7	67946	Washer, Plain	1	1 1/32 inch
8	3008468	Plug, Pipe	2	1/2 NPT
9	3008470	Plug, Pipe	1	1 NPT
10	3055069	Plug, Threaded	1	1 - 18 UNS
11	3071179	Clip	3	
12	3095051	Tube, Lub Oil Suction	1	
13	3095723	Nut, Hexagon Flange	2	
14	3034830	Retainer, Seal	1	
15	3034986	Seal, Rectangular Ring	1	
16	3035624	Screw, Captive Washer Cap	2	3/8 - 16 x 1 1/2 inch

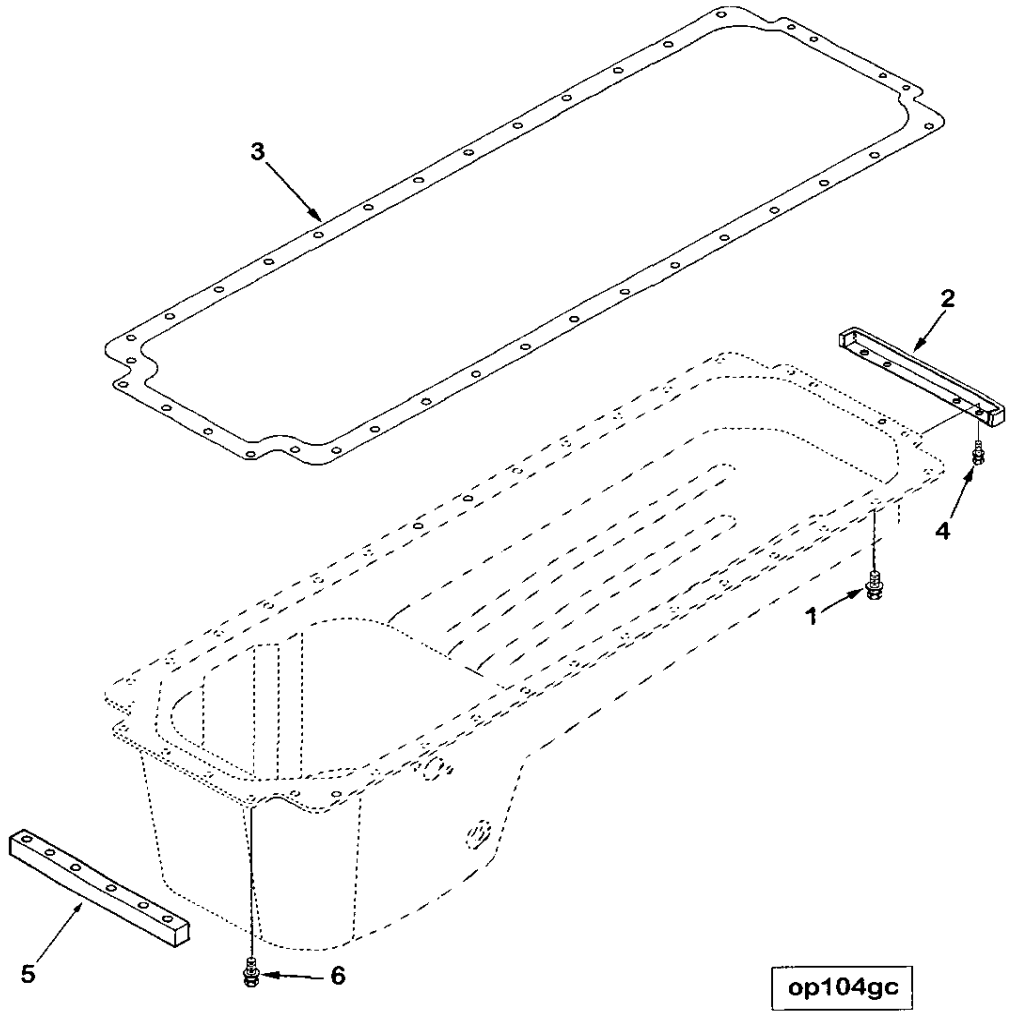
3
2
4
1
5
6
op104gc

Ref No.	Part Number	Part Name	Req	Remarks
		OIL PAN MOUNTING		
		OPTION OP1752		Mounting for steel stamped oil pan with fuel filter bracket. Mounting from the pan ledge. For use on Celect engine only.
1	3032674	Screw, Captive Washer Cap	26	
2	3058675	Seal, Dust	1	
3	3068463	Gasket, Oil Pan	1	
4	3082608	Screw, Captive Washer Cap	4	
5	218813	Bracket, Shipping	1	
6	3818599	Screw, Captive Washer Cap	4	

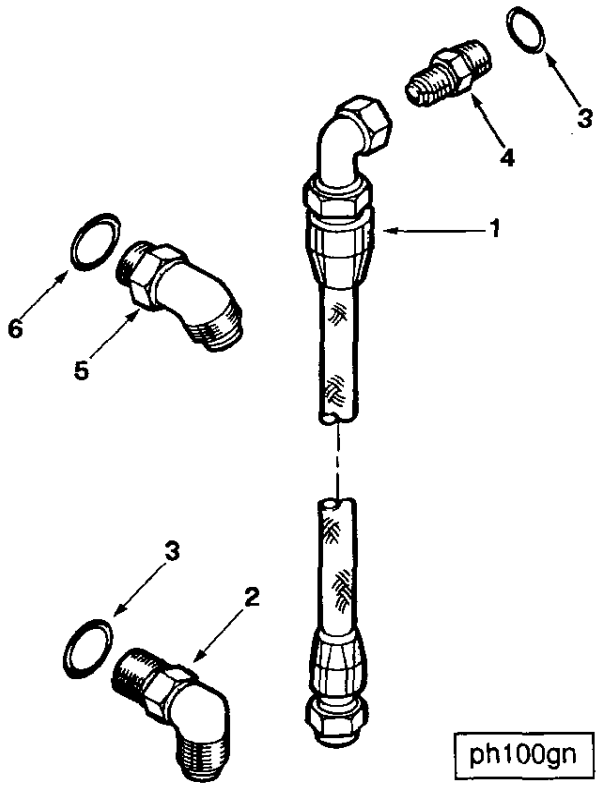
3
4
1
6
5
3
2
ph100gn

Ref No.	Part Number	Part Name	Req	Remarks
		ELECTRONIC CONTROL MODULE PLUMBING		
		OPTION PH1702		Plumbing for electronic control cooler used with fuel filters mounted to engine in locations other than fuel pump mounted. 45 degree fuel cooling plate inlet fitting. Also includes 90 degree elbow fitting to filter head.
1	AS10018-60SL	Hose, Flexible	1	
2	129859	Elbow, Male Union	1	
3	3040817	Seal, O Ring	2	
4	129866	Union, Male	1	
5	200293	Elbow, Male Union	1	
6	3040817	Seal, O Ring	1	

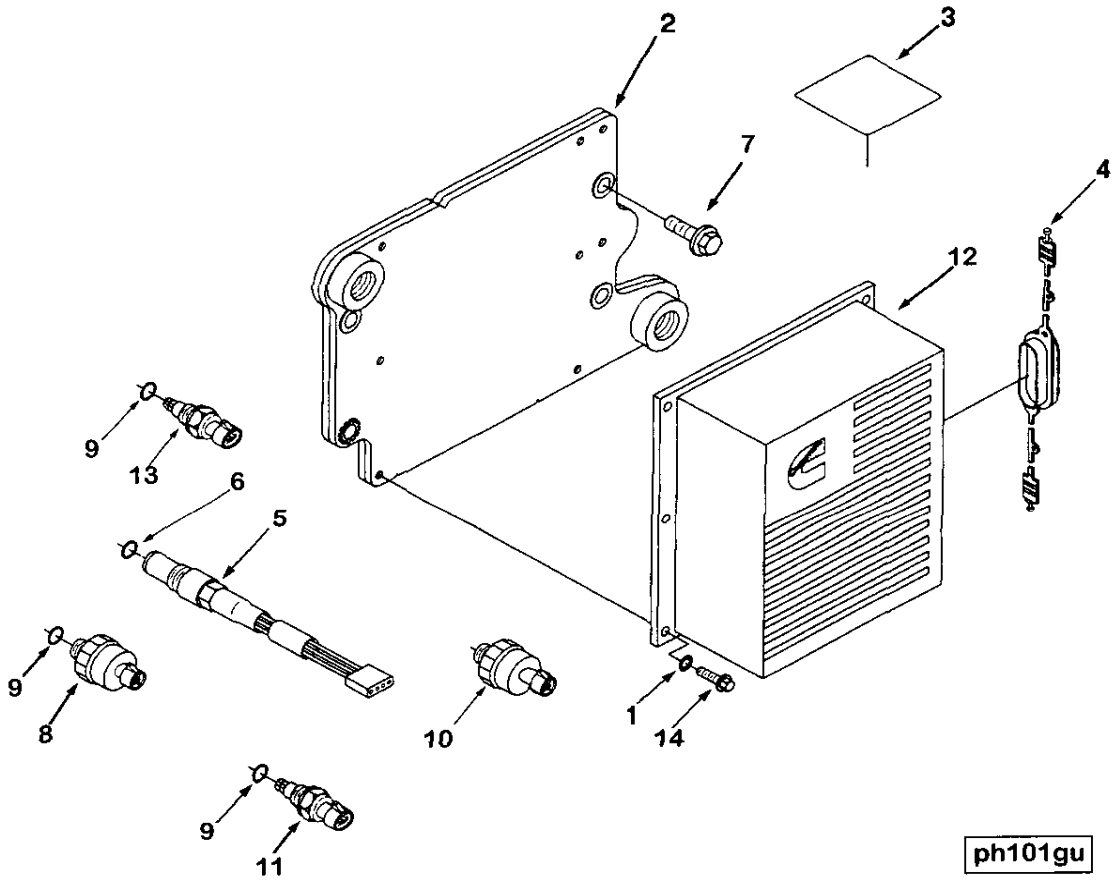
2
3
7
4
12
9
13
6
5
9
8
10
1
14
9
11
ph101gu

Ref No.	Part Number	Part Name	Req	Remarks
		ENGINE CONTROL MODULE		
		OPTION PH1730		Celect components required to support programmed data. Ambient sensor required for this rating.
1	3058568	Washer, Lock	1	
2	3062625	Cooler, Electronic Control	1	
3	3609867	Dataplate	1	
4	3067497	Cover, Protective	1	
5	3078151	Sensor,Position	1	
6	3046201	Seal, O-ring	1	
7	3082523	Screw, Captive Washer Cap	4	
8	3084521	Sensor, Pressure	1	Boost
9	3037537	Seal, O-ring	1	
10	3080407	Sensor, Pressure	1	Ambient air
11	3085185	Sensor, Temperature	1	Intake manifold
9	3037537	Seal, O-ring	1	
12	3096662	Module, Electronic Control	1	
13	3865312	Sensor, Temperature	1	
9	3037537	Seal, O-ring	1	
14	3901865	Screw, Hex Flange Head Cap	6	

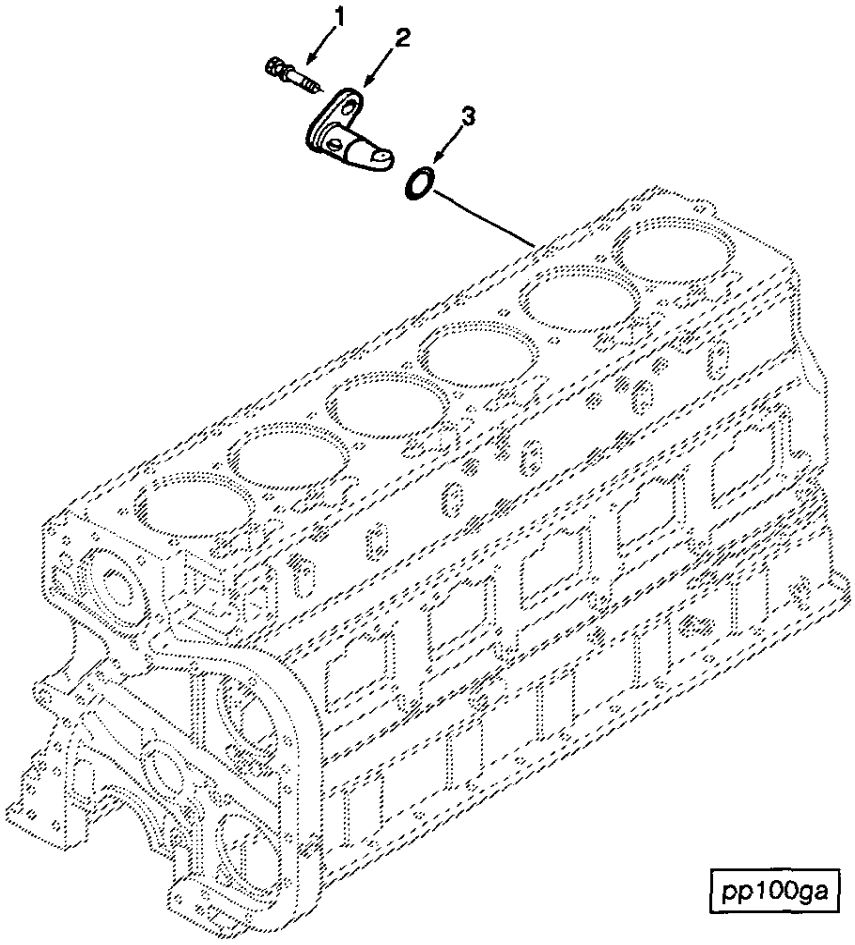
1
2
3
pp100ga

Ref No.	Part Number	Part Name	Req	Remarks
		PISTON COOLING NOZZLE		
		OPTION PP2261		
1	3067954	Screw, Captive Washer Cap	6	3/8 - 16 x 3/4 inch
2	3068526	Nozzle, Piston Cooling	6	
3	3068527	Seal, O Ring	6	

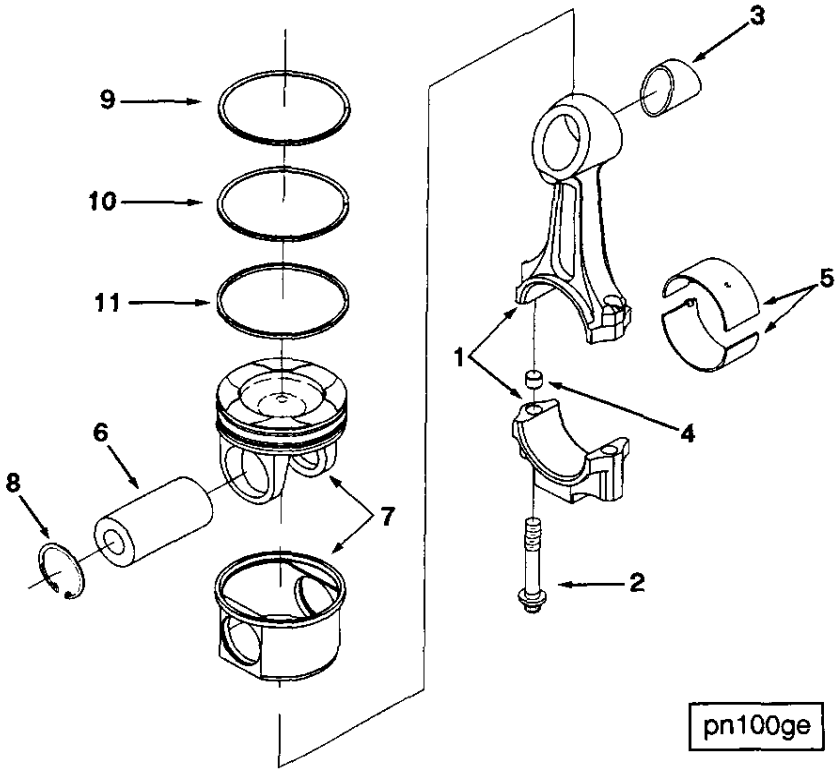
3
9
10
11
5
1
4
6
8
7
2
pn100ge

Ref No.	Part Number	Part Name	Req	Remarks
		ENGINE PISTON		
		OPTION PP2261		
				Certified Model Name:NTA14-CE Timing Gear Code: JD CPL: 2261 Certified by: EPA, CARB AFC: X ASA: N/A EFC: N/A ETC: X Exhaust Manifold Type: Dry Engine Aspiration: Aftercooled Engine Control System: Celect Application: Industrial Power Turbine: N/A Design Phase:96N14 Industrial HCR (spur) gears for use with ambient sensor.
1	3078330	Rod, Engine Connecting	6	
	(3078329)	Rod, Engine Connecting	1	
2	3055171	Screw, Connecting Rod Cap	2	
3	3064295	Bushing	1	
4	219154	Dowel, Ring	2	
5	3055145	Bearing, Connecting Rod	12	Standard
5	3055146	Bearing, Connecting Rod	12	0.010 Inch Undersize
5	3055147	Bearing, Connecting Rod	12	0.020 Inch Undersize
5	3055148	Bearing, Connecting Rod	12	0.030 Inch Undersize
5	3055149	Bearing, Connecting Rod	12	0.040 Inch Undersize
6	3064304	Pin, Piston	6	
		PISTON		
	3803741	Kit, Engine Piston	6	
7	(3087634)	Piston, Engine	1	
8	3064305	Ring, Retaining	2	
		PISTON RINGS		
	3804500	Set, Piston Ring	6	
9	3064396	Ring, Compression Piston	1	
10	3064397	Ring, Compression Piston	1	
11	3082580	Ring, Oil Piston	1	
		CYLINDER KIT		
	3804501	Kit, Cylinder		
	(3055099)	Liner, Cylinder	1	
	(3087634)	Piston, Engine	1	
	3064304	Pin, Piston	1	
	3064305	Ring, Retaining	2	
	215090	Seal, O Ring	1	
	3032874	Seal, O Ring	2	
	3804500	Set, Piston Ring	1	

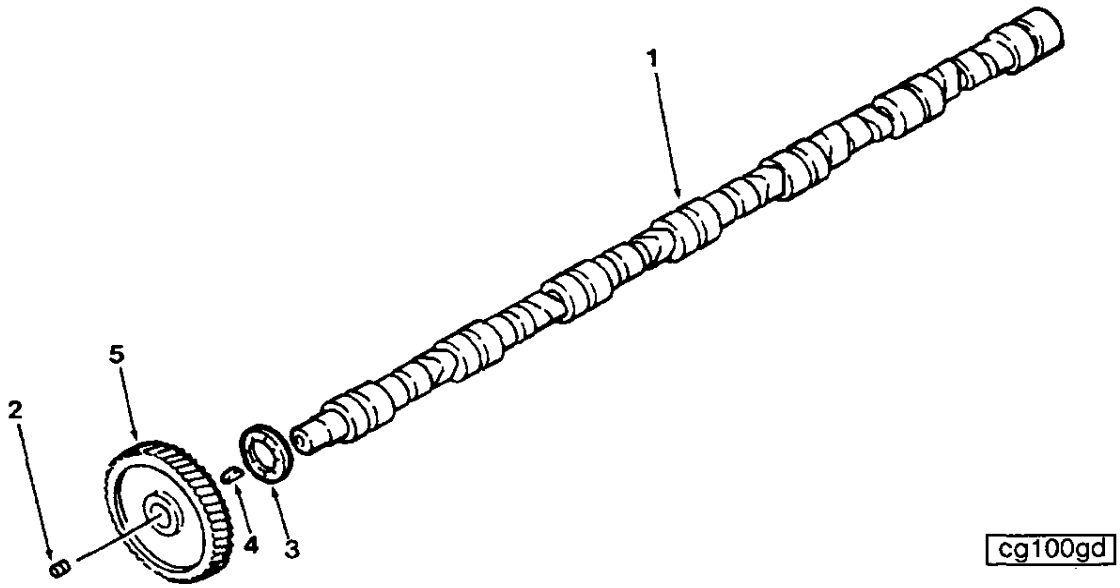

Ref No.	Part Number	Part Name	Req	Remarks
		CAMSHAFT		
		OPTION PP2261		
1	3804659	Camshaft		
	(3084487)	Camshaft	1	
2	68193	Plug, Pipe	1	1/8 NPT
3	215233	Bearing, Thrust	1	
4	3021601	Key, Plain Woodruff	1	
5	3073343	Gear, Camshaft	1	

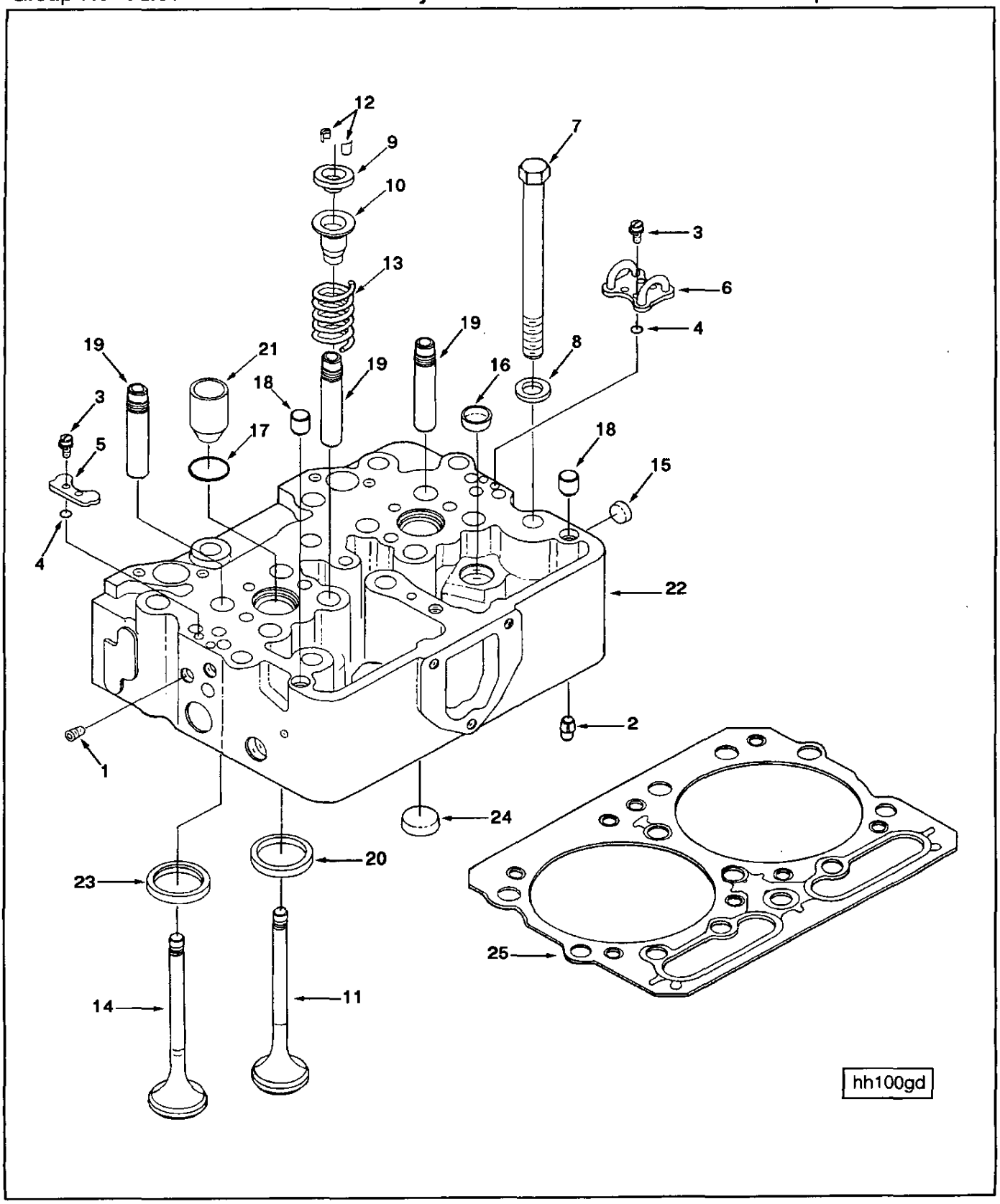
12
9
10
13
7
3
6
4
19
21
19
19
16
8
18
3
5
17
18
15
4
22
2
1
24
20
23
25
14
11
hh100gd

Ref No.	Part Number	Part Name	Req	Remarks
		CYLINDER HEAD		
		OPTION PP2261		
1	S-911-B	Plug, Pipe	10	1/8 NPT
2	68445	Pin, Groove	6	
3	70772	Screw, Fillister Head Cap	12	1/4 - 20 x 1/2 inch
4	3087740	Seal, O Ring	12	
5	135308	Plate, Cover	2	
6	147100	Connection, Fuel Crossover	2	
7	3071161	Screw, Hexagon Head Cap	36	11/16 - 16 x 7 1/4 inch
8	3071075	Washer, Plain	36	5/8 inch
	3084060	Assb., Cylinder Head (tla)	3	
9	3064247	Retainer, Valve Spring	8	
10	3064281	Seal, Valve Stem	8	
	3803854	Kit, Intake Valve	4	
11	3084045	Valve, Intake	4	
12	3072369	Collet, Half Valve	8	
	3803726	Kit, Exhaust Valve	4	
12	3072369	Collet, Half Valve	8	
14	3069672	Valve, Exhaust	4	
13	3070460	Spring, Valve	8	
15	3007634	Plug, Expansion	3	
16	3007635	Plug, Expansion	6	1 inch
17	3007759	Seal, O Ring	2	
18	3027106	Dowel, Ring	2	
19	3064312	Guide, Valve Stem Intake	8	
20	3076515	Insert, Valve Intake	4	Blue
21	3070486	Sleeve, Injector	2	
22	(3078360)	Head, Cylinder	1	
23	3084020	Insert, Valve Exhaust	4	
24	3007636	Plug, Expansion	2	32.1 mm
25	3076189	Gasket, Cylinder Head	3	

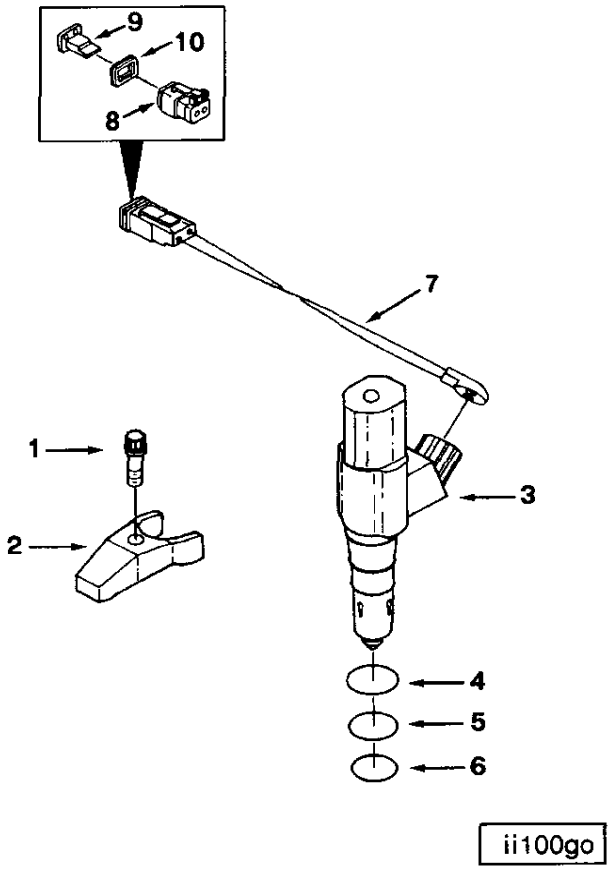
9
10
8
7
1
2
3
4
5
6
ii100go

Ref No.	Part Number	Part Name	Req	Remarks
		INJECTOR AND MOUNTING		
		OPTION PP2261		
1	205323	Screw, Twelve Point Cap	6	3/8 - 16 x 2 3/4 inch
2	3064393	Clamp, Injector	6	
3	3088178	Injector	6	
4	3070136	Seal, O Ring	1	Black
5	3070137	Seal, O Ring	1	Brown
6	3070138	Seal, O Ring	1	Black with white dot
7	3076256	Harness, Wiring	1	
8	3068479	Connector, Electrical	1	
9	3068505	Retainer, Connector Wiring	1	
10	3892498	Seal, Wire	1	

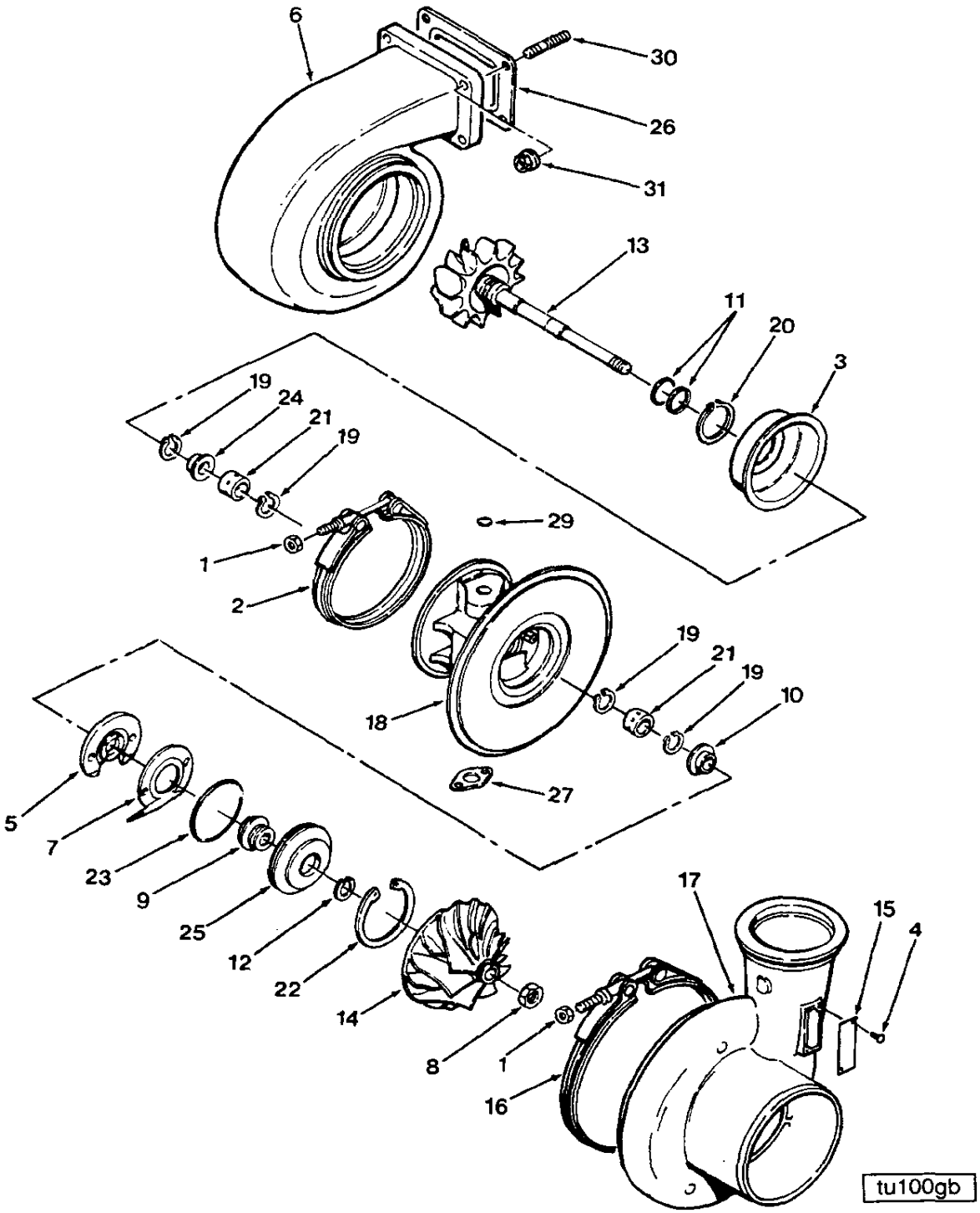
6
30
26
31
13
11
20
3
19
24
21
19
29
1
2
19
21
19
10
18
27
5
7
23
9
25
12
22
14
8
1
16
17
15
4
tu100gb

Ref No.	Part Number	Part Name	Req	Remarks
		TURBOCHARGER		
		OPTION PP10108		HT60-N0888A/H36K1 Turbo. First used on N14E industrial . 525 BHP @ 2100 RPM. Non-watercooled bearing housing. CPL:2261
	3804738	Kit, Turbocharger	1	
	(3537963)	Assembly, Turbocharger	1	
1	3529372	Nut, Regular Hexagon	2	1/4 - 28 UNF
2	3504959	Clamp, V Band	1	
3	3519155	Shield, Turbocharger Heat	1	
4	3519163	Screw, Drive	4	
5	3532984	Bearing, Tur Thrust	1	
6	3536998	Housing, Turbine	1	
7	3529658	Baffle, Oil	1	
8	3519471	Nut, Lock	1	7/16 - 20 UNF
9	3521439	Slinger, Oil	1	
10	3521440	Collar, Thrust	1	
11	3521441	Seal, Split Ring	2	
12	3521442	Seal, Split Ring	1	
13	3522075	Shaft & Wheel	1	
14	3525304	Impeller, Tur Compressor	1	
15	3527907	Dataplate	1	
16	3532045	Clamp, V Band	1	
17	3537961	Housing, Compressor	1	
18	3536097	Housing, Tur Bearing	1	
19	3709510	Ring, Retaining	4	
20	3718373	Ring, Retaining	1	
21	3722366	Bearing, Turbocharger	2	
22	3723863	Ring, Retaining	1	
23	3751948	Seal, O Ring	1	
24	3757753	Sleeve, Oil Control	1	
25	3759618	Plate, Oil Seal	1	
		MOUNTING PARTS		
26	3069177	Gasket, Turbocharger	1	
27	3202117	Gasket, Connection	1	
29	3037537	Seal, O Ring	1	
30	3056155	Stud	4	
31	3056158	Nut, Hexagon Flange	4	3/8 - 24 UNF

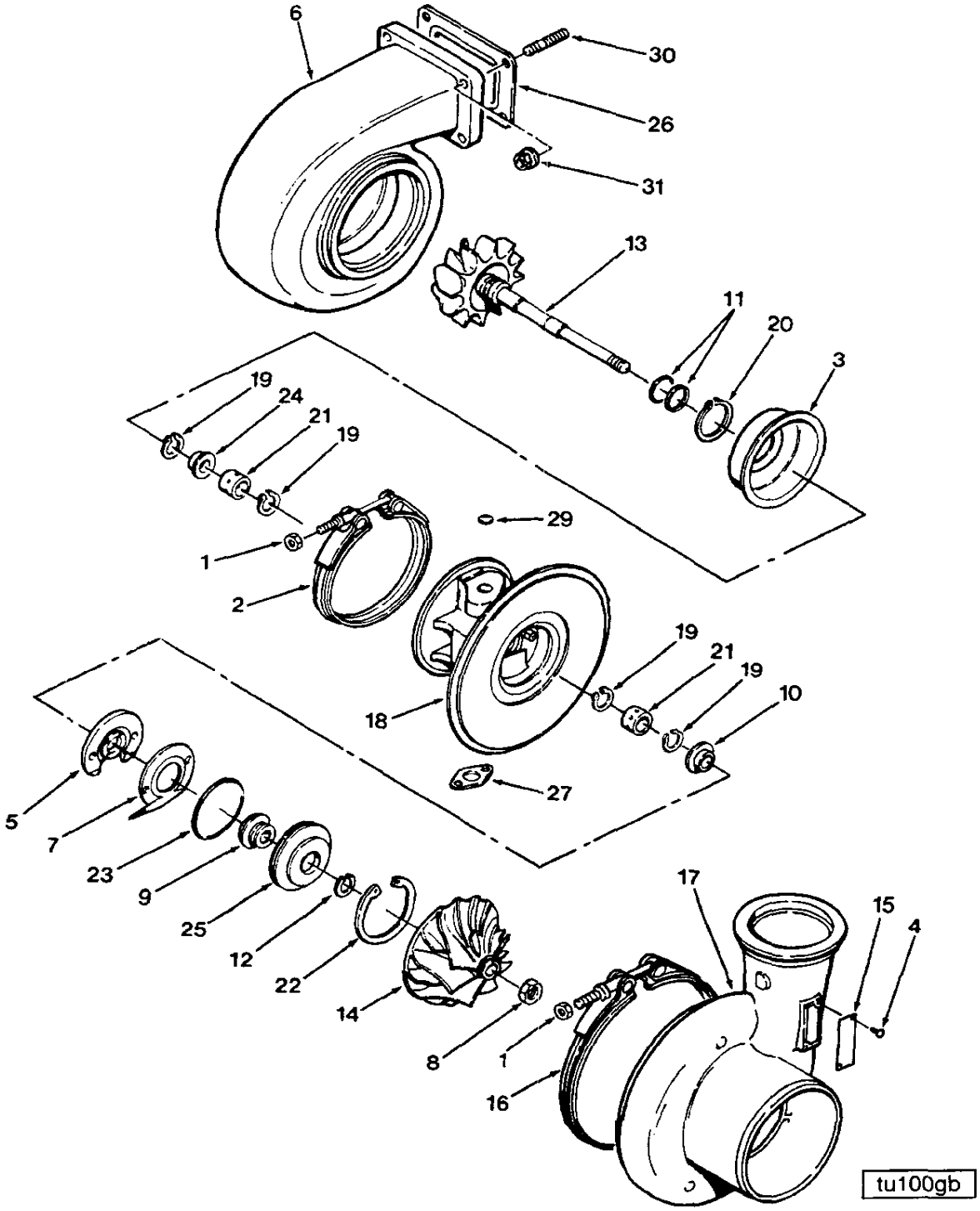
6
30
26
31
13
11
20
3
19
24
21
19
29
1
2
19
21
19
10
18
27
5
7
23
9
25
12
22
14
8
1
16
17
15
4
tu100gb

Ref No.	Part Number	Part Name	Req	Remarks
		TURBOCHARGER KITS		
		OPTION PP10108		
	3803745	Kit, Turbo Repair	1	
29	3037537	Seal, O Ring	1	
26	3069177	Gasket, Turbocharger	1	
27	3202117	Gasket, Connection	1	
2	3504959	Clamp, V Band	1	
11	3521441	Seal, Split Ring	1	
12	3521442	Seal, Split Ring	1	
1	3529372	Nut, Regular Hexagon	2	1/4 - 28 UNF
16	3532045	Clamp, V Band	1	
5	3532984	Bearing, Tur Thrust	1	
19	3709510	Ring, Retaining	4	
20	3718373	Ring, Retaining	1	
21	3722366	Bearing, Turbocharger	2	
22	3723863	Ring, Retaining	1	
23	3751948	Seal, O Ring	1	
24	3757753	Sleeve, Oil Control	1	

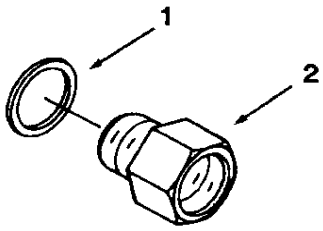

op600gx

Ref No.	Part Number	Part Name	Req	Remarks
		REMOTE OIL DRAIN		
		OPTION RD1004		Oil pan drain adapter with 3/4 inch NPTA for remote oil drain. Supplied in kit.
1	67946	Washer, Plain	1	
2	196155	Connector, Female	1	

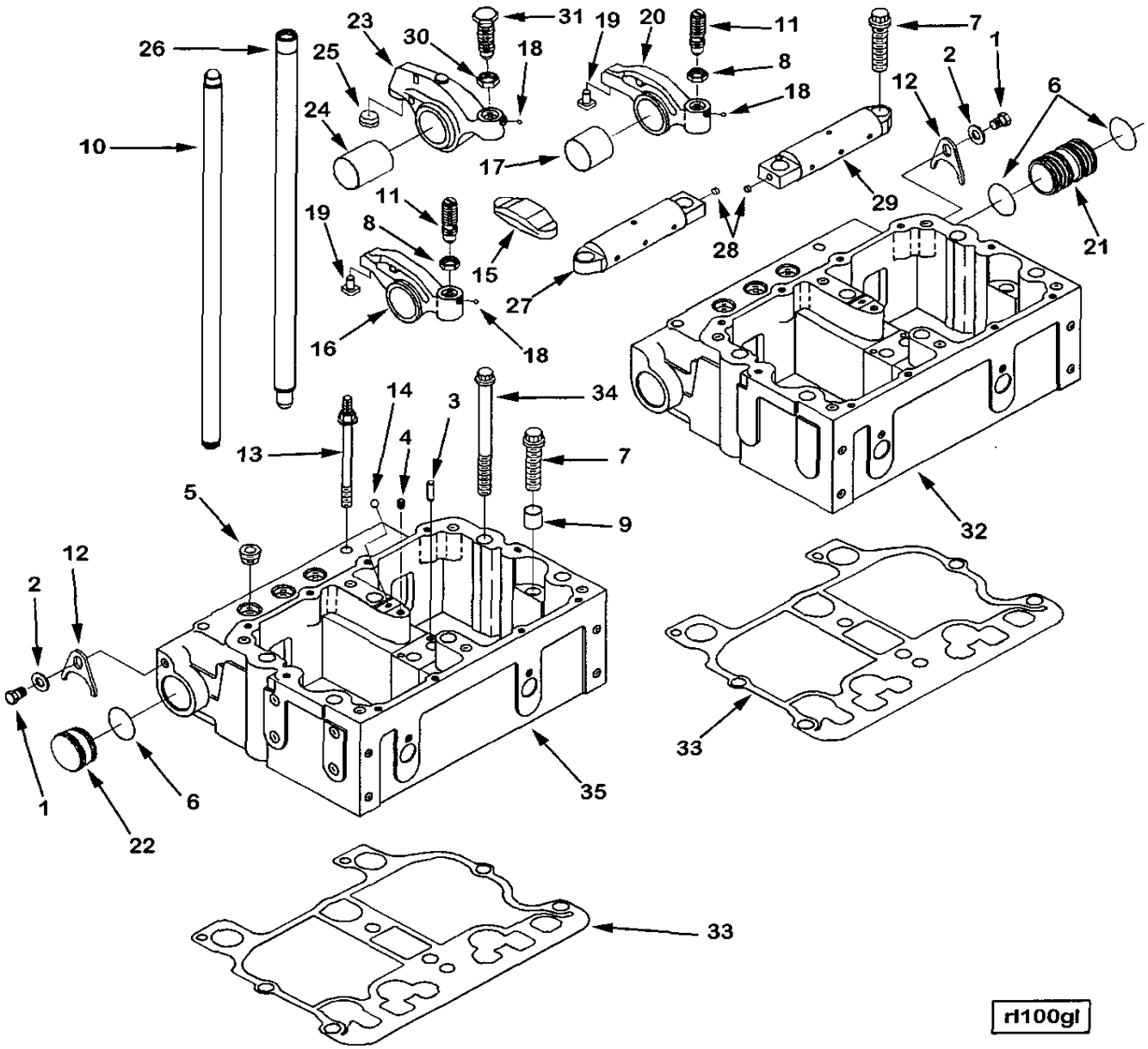
26
25
23
30
31
19
20
11
7
1
2
8
18
12
6
24
10
17
29
21
11
19
8
15
28
27
16
18
14
3
34
4
13
7
5
9
32
12
2
33
1
6
35
22
33
rl100gl

Ref No.	Part Number	Part Name	Req	Remarks
		ROCKER LEVER		
		OPTION RL1719		Rocker lever housings and mounting, valve crossheads and push tubes. For use without engine brake. Includes inserted valve rocker levers. 1.3 RR cast lever for N14. Contains water manifold plumbing. Does not offer any provision for aftercooler water supply.
1	S-181-B	Screw, Hexagon Head Cap	3	
2	S-602	Washer, Plain	3	
3	148555	Dowel, Pin	6	
4	3008464	Plug, Pipe	3	1/16 NPT
5	3008468	Plug, Pipe	9	1/2 NPT
6	3050667	Seal, O-ring	5	
7	3064320	Screw, Twelve Point Cap	12	9/16 - 12 x 2 1/4 inch
8	3066257	Nut, Regular Hexagon Jam	12	9/16 - 18 UNF
9	3066270	Dowel, Ring	6	
10	3066291	Rod, Push	12	
11	3066644	Screw, Slotted Set	12	
12	3067950	Plug, Retainer	3	
13	3067952	Screw, Hexagon Head Cap	6	3/8 - 16 x 4 1/4 inch
14	3069637	Plug, Ball	3	
15	3069689	Crosshead, Valve	12	
16	3070465	Lever, Rocker	6	
17	3058462	Bushing	1	
18	3067941	Plug, Ball	1	
	(3070463)	Lever, Rocker	1	
19	3070982	Insert, Rocker Lever	1	
20	3070466	Lever, Rocker	6	
17	3058462	Bushing	1	
18	3067941	Plug, Ball	1	
	(3070464)	Lever, Rocker	1	
19	3070982	Insert, Rocker Lever	1	
21	3071228	Tube, Water Transfer	2	
22	3071229	Plug, O-ring	1	
23	3073494	Lever, Rocker	6	
24	3064267	Bushing	1	
25	3064621	Socket, Tappet	1	
18	3067941	Plug, Ball	1	
	(3073303)	Lever, Rocker	1	
26	3073499	Rod, Push	6	
27	3074375	Shaft, Rocker Lever	3	
28	203933	Plug, Expansion	1	
	(3074373)	Shaft, Rocker Lever	1	
29	3074376	Shaft, Rocker Lever	3	
28	203933	Plug, Expansion	1	
	(3074374)	Shaft, Rocker Lever	1	
30	3074975	Nut, Regular Hexagon Jam	6	
31	3075318	Screw, Hexagon Head Set	6	
32	3076221	Housing, Rocker Lever	2	
33	3076292	Gasket, Rkr Lever Housing	3	
34	3081151	Screw, Twelve Point Cap	18	
35	3076220	Housing, Rocker Lever	1	Use on front for thermostat housing connection.

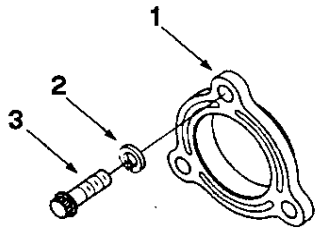

sm100ga

Ref No.	Part Number	Part Name	Req	Remarks
		STARTING MOTOR		
		OPTION SM1703		Used only with dry cast iron flywheel housing. For use without magnetic switch options.
1	9245	Spacer, Starting Motor	1	
2	S-603	Washer, Lock	3	5/8 Inch
3	153581	Screw, Twelve Point Cap	3	5/8 - 11 x 2 Inch

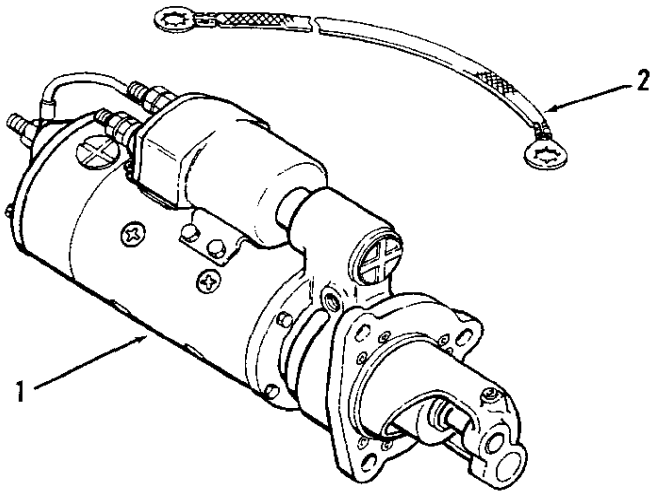

st100ga

Ref No.	Part Number	Part Name	Req	Remarks
		STARTING MOTOR		
		OPTION ST1341		
				Supplier: Cummins Starting Motor count: 1 Manufacturer/Model: Delco Remy/ DR50MT400. Power supply: electric. Voltage: 24 Rotation: CW Flange cover count: 1 Length (in): 20.4 Solenoid angle (degrees) 277.5. Housing material: cast iron Mounting location: exhaust side. Mounting supplied by Cummins. Flywheel housing may be supplied by either Cummins or customer.
1	3021038	Motor, Starting	1	
2	3018924	Wire, Ground	1	

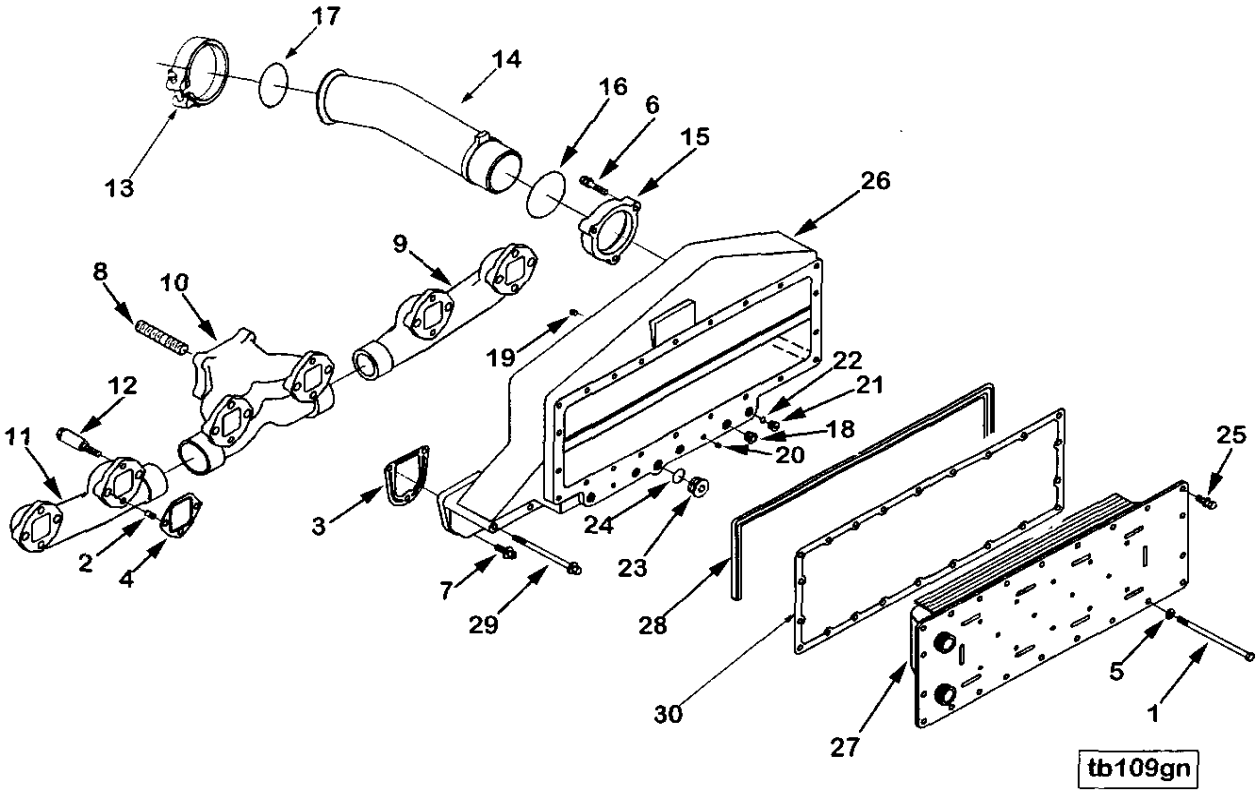
17
14
16
6
15
13
26
9
8
10
19
22
21
12
18
11
20
25
3
24
23
2
4
7
29
28
5
30
1
27
tb109gn

Ref No.	Part Number	Part Name	Req	Remarks
		TURBOCHARGER ARRANGEMENT		
		OPTION TB1323		N14 Industrial intake manifold and aftercooler core . Standard 94N14 automotive exhaust manifold with vertical turbo mounting flange. Front out turbo. Drain tube routes from turbo to rear, 1 3/16 hole in block. Supply is taken from lube oil cooler.
1	69102	Screw, Hexagon Head Cap	4	3/8 - 16 x 7 Inch
2	105199	Pin, Groove	6	
3	3008591	Gasket, Intake Manifold	3	
4	3020943	Gasket, Exhaust Manifold	6	
5	3036460	Washer, Spring	4	
6	3044413	Screw, Captive Washer Cap	2	3/8 - 16 x 2 Inch
7	3051427	Screw, Captive Washer Cap	3	3/8 - 16 x 1 5/16 Inch
8	3056155	Stud	4	
9	3062568	Manifold, Exhaust	1	
10	3065022	Manifold, Exhaust	1	
11	3065024	Manifold, Exhaust	1	
12	3067930	Screw & Spacer	6	
13	3067979	Clamp, V Band	1	
14	3084601	Tube, Air Crossover	1	
15	3084603	Retainer, Seal	1	
16	3084848	Seal, O Ring	1	
17	3095826	Seal, O Ring	1	
18	3008465	Plug, Pipe	2	1/8 NPT
19	3008466	Plug, Pipe	1	
20	3008468	Plug, Pipe	2	1/2 NPT
21	3037536	Plug, Threaded	3	9/16 - 18 UNF
22	3037537	Seal, O Ring	1	
23	3040818	Plug, Threaded	1	1 3/16 - 12
24	3035228	Seal, O Ring	1	
25	3040838	Screw, Captive Washer Cap	16	3/8 - 16 x 1 1/4 Inch
26	3097278	Manifold, Air Intake	1	
27	3084383	Core, Aftercooler	1	
28	3627381	Seal, Rectangular Strip	1	
29	3865178	Screw, Captive Washer Cap	2	
30	3084382	Gasket, Aftercooler Cover	1	

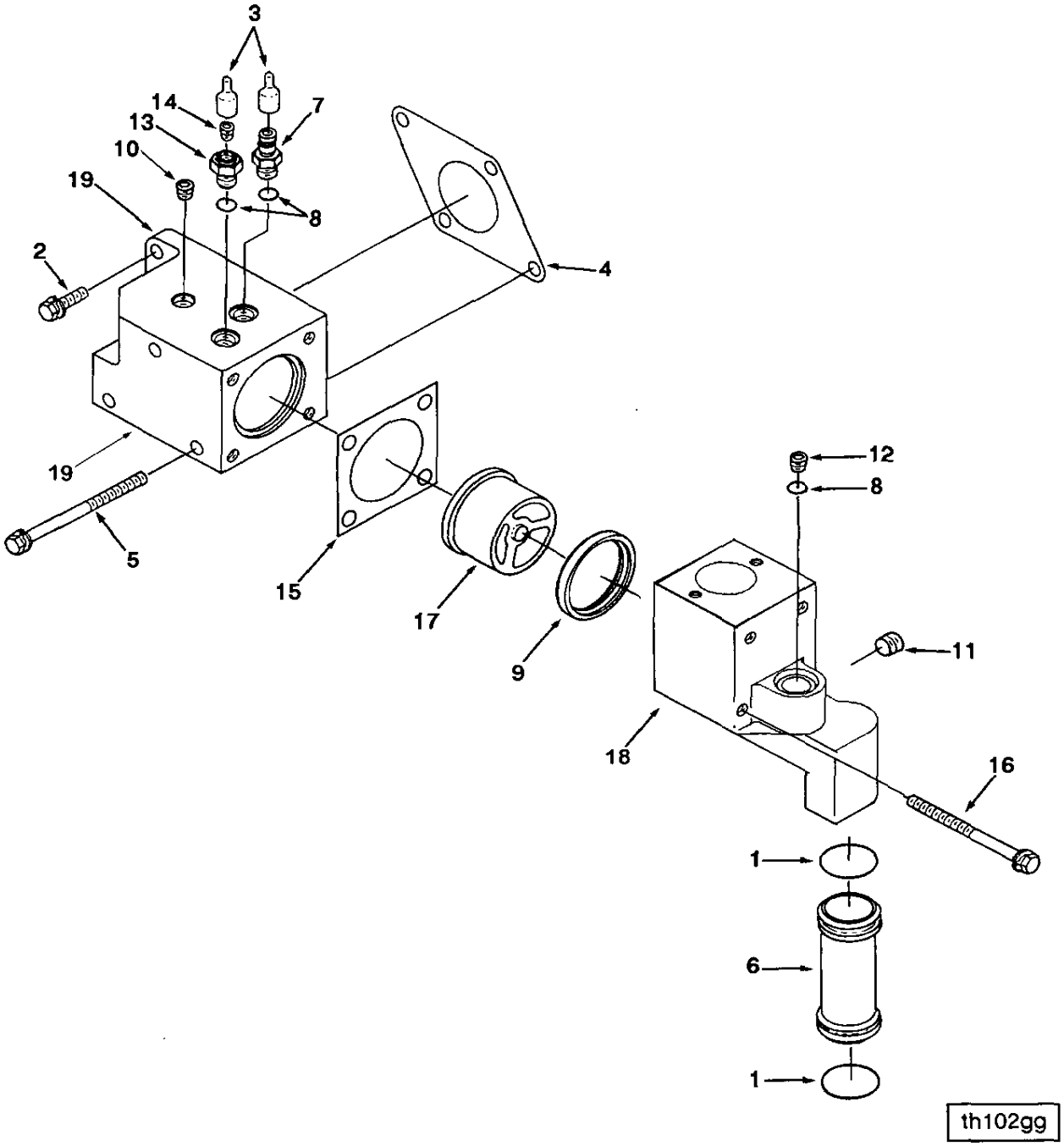
3
14
13
10
19
7
8
2
4
19
5
15
17
9
12
8
11
18
16
1
6
1
th102gg

Ref No.	Part Number	Part Name	Req	Remarks
		THERMOSTAT HOUSING		
		OPTION TH1103		Engine thermostat housing with integral connections for aftercooler core coolant outlet and bypass plumbing to water pump. Not intended for use with torque converter or other auxiliary coolers. Contains non-vented type thermostat with 180-200 degrees F temperature range.
1	43463-A	Seal, O Ring	2	
2	3010596	Screw, Captive Washer Cap	1	3/8 - 16 x 1 1/4 inch
3	3044896	Cover, Protective	1	
4	3064313	Gasket, Thermostat Hsg	1	
5	3066288	Screw, Captive Washer Cap	3	3/8 - 16 x 4 3/4 inch
6	3076491	Tube, Water Transfer	1	
7	3865312	Sensor, Temperature	1	
8	3037537	Seal, O Ring	2	
9	186780	Seal, Thermostat	1	
10	3008466	Plug, Pipe	1	1/4 NPT
11	3013786	Plug, Pipe	1	3/8 NPT
12	3037536	Plug, Threaded	1	9/16 - 18 UNF
8	3037537	Seal, O Ring	2	
13	3049145	Adapter, Probe	1	
14	3008465	Plug, Pipe	1	1/8 NPT
8	3037537	Seal, O Ring	1	
15	3066285	Gasket, Thm Housing Cover	1	
16	3066287	Screw, Captive Washer Cap	4	3/8 - 16 x 4 3/8 inch
17	3076489	Thermostat	1	
18	3084600	Cover, Thm Housing	1	
19	3076539	Housing, Thermostat	1	

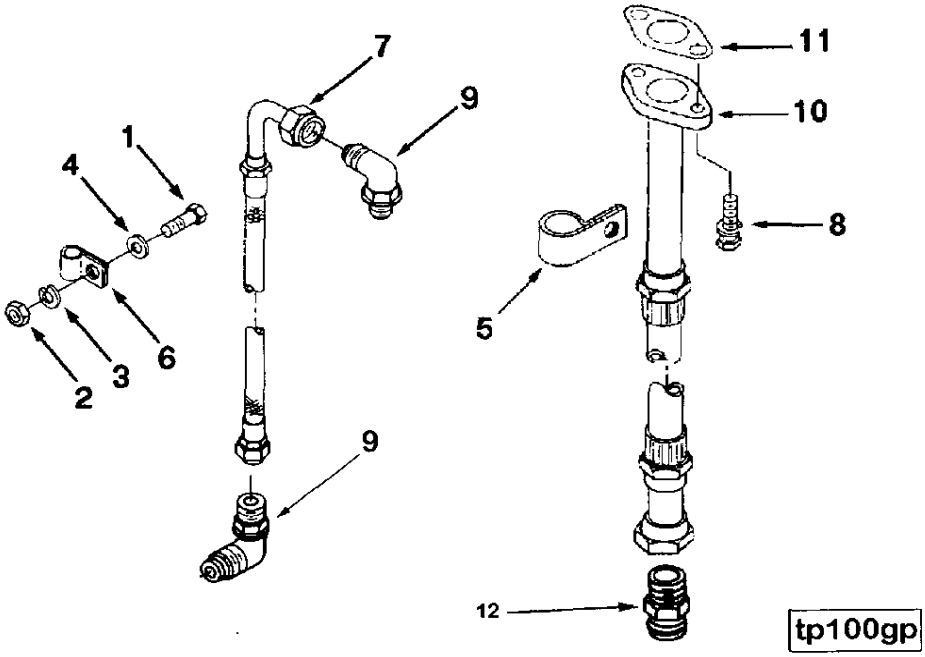

Ref No.	Part Number	Part Name	Req	Remarks
		TURBOCHARGER PLUMBING		
		OPTION TP1719		Turbocharger oil supply and drain plumbing for front out exhaust. Drain tube routes from turbo to rear, 1 3/16 hole in block. Supply is taken from tube oil cooler.
1	S-115	Screw, Hexagon Head Cap	1	5/16 - 18 x 7/8 Inch
2	S-221	Nut, Heavy Hexagon	1	5/16 - 18 UNC
3	S-605	Washer, Lock	1	5/16 Inch
4	S-626	Washer, Plain	2	5/16 Inch
5	69465	Clip	1	
6	108722	Clip	1	
7	209995	Tube, Lub Oil Aerator	1	
8	3010596	Screw, Captive Washer Cap	2	3/8 - 16 x 1 1/4 inch
9	3037535	Elbow, Male Union	2	
10	3076164	Connection, Tur Oil Drain	1	
11	3202117	Gasket, Connection	1	
12	3069129	Union, Male	1	

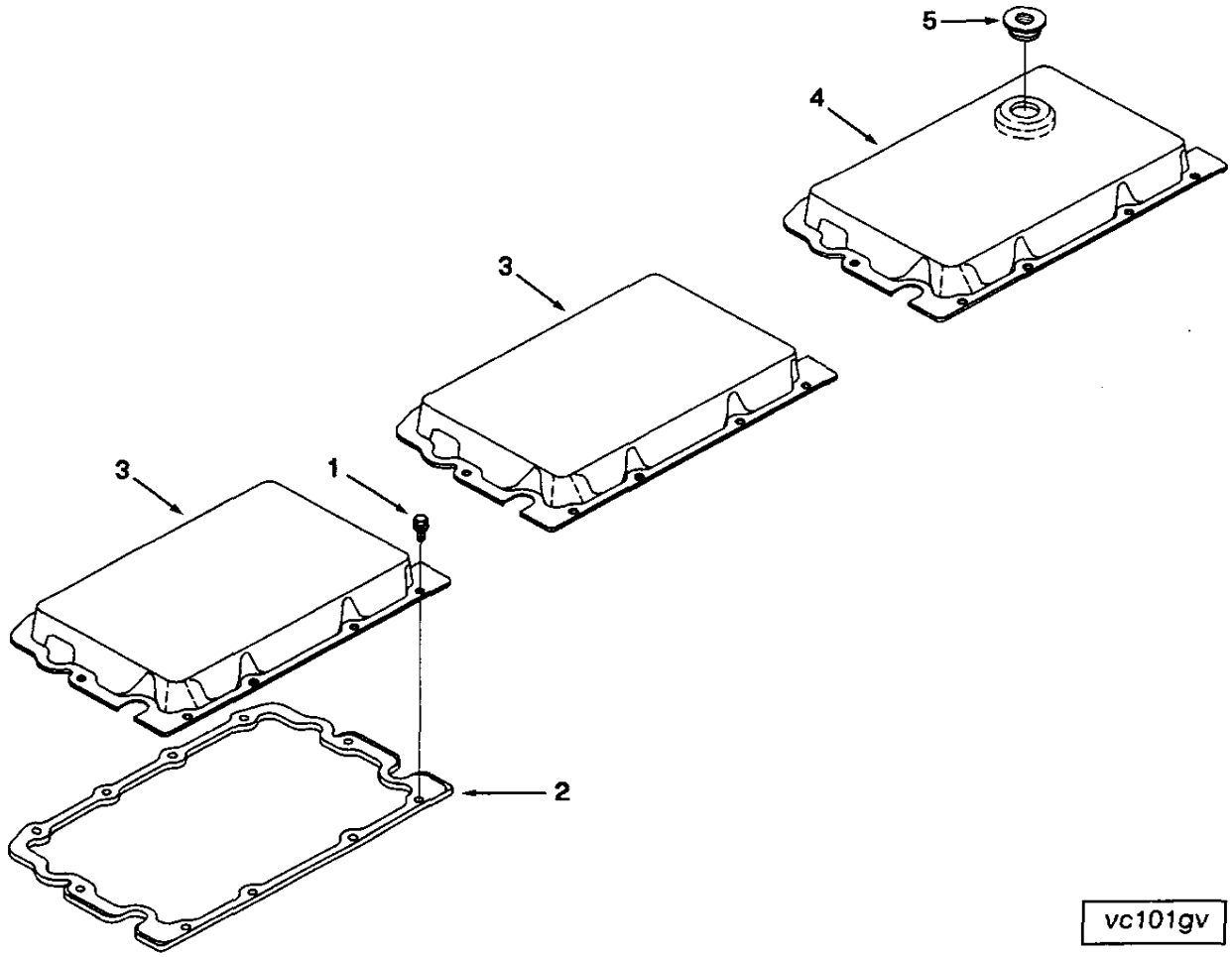
5
4
3
3
1
2
vc101gv

Ref No.	Part Number	Part Name	Req	Remarks
		VALVE COVER		
		OPTION VC1047		Stamped steel valve covers and mounting with breather located over No. 6 cylinder and oil fill located in hand hole cover.
1	3066310	Screw, Captive Washer Cap	30	1/4 - 20 x 3/4 Inch
2	3066311	Gasket, Rocker Lever Cover	3	
3	3075022	Cover, Rocker Lever	2	
4	3075024	Cover, Rocker Lever	1	
5	3042401	Seal, Grommet	1	

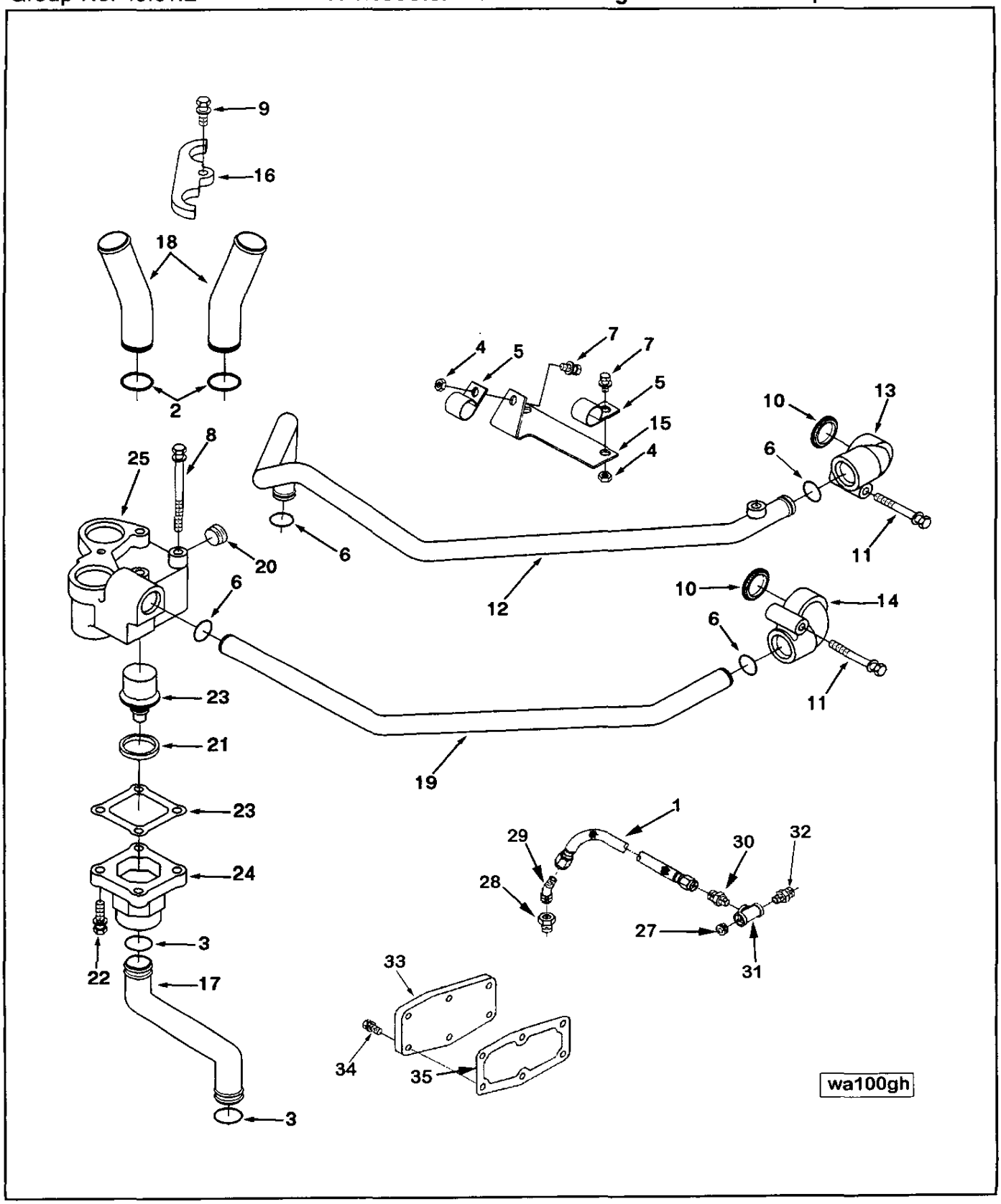
9
16
18
2
4
5
7
7
5
15
4
10
13
6
8
25
20
6
11
12
10
14
6
6
11
23
21
19
23
1
29
30
32
24
28
27
3
31
22
17
33
34
35
3
wa100gh

Ref No.	Part Number	Part Name	Req	Remarks
		AFTERCOOLER WATER PLUMBING		
		OPTION WA1710		Aftercooler plumbing with thermostatic control of aftercooler coolant temperature. Used with 1-pump 2-loop cooling system.
1	AK4021-SS	Hose, Flexible	1	
2	43463-A	Seal, O Ring	2	
3	68910	Seal, O Ring	4	
4	69832	Nut, Regular Hexagon	2	5/16 - 18 UNC
5	107460	Clip	2	
6	109080	Seal, O Ring	4	
7	3015283	Screw, Captive Washer Cap	2	5/16 - 18 x 3/4 Inc
8	3040836	Screw, Captive Washer Cap	3	
9	3040838	Screw, Captive Washer Cap	1	3/8 - 16 x 1 1/4 Inch
10	3063294	Seal, Grommet	2	
11	3079842	Screw, Captive Washer Cap	2	
12	3084385	Tube, Water Outlet	1	
13	3084388	Connection, Water Transfer	1	
14	3084389	Connection, Water Transfer	1	
15	3084390	Bracket, Water Tube	1	
16	3084594	Clamp, Tube	1	
17	3088933	Tube, Oil Cooler	1	
18	3084599	Tube, Water Transfer	2	
19	3084725	Tube, Water Transfer	1	
20	69819	Plug, Pipe	1	3/4 NPT
21	188318	Seal, Thermostat	1	
22	3035624	Screw, Captive Washer Cap	1	3/8 - 16 x 1 1/2 Inch
23	3084384	Thermostat	1	
24	3084387	Cover, Thermostat Housing	1	
25	3084596	Housing, Thermostat	1	
26	3084792	Gasket, Thm Housing Cover	1	
27	S-911-B	Plug, Pipe	1	
28	S-955	Bushing, Reducing Pipe	1	
29	S-1047-A	Elbow, Male Adapter	1	
30	68138	Connector, Male	1	
31	70802	Tee, Female Pipe	1	
32	139969	Nipple, Plain Hexagon	1	
33	132019	Cover, Water Header	1	
34	3013904	Screw, Captive Washer Cap	6	
35	3069098	Gasket, Cover Plate	1	

wd100gc

Ref No.	Part Number	Part Name	Req	Remarks
		WATER DISCHARGE PLUMBING OPTION WD1001		
1	3087690	Draincock	1	Draincock for water jacket on right rear of engine.

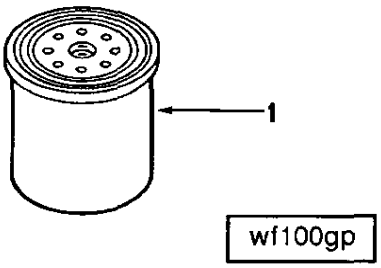

Ref No.	Part Number	Part Name	Req	Remarks
		CORROSION RESISTOR OPTION WF1169		Water system corrosion filter. Filter head and mounting are integral part of oil cooler assembly.
1	3844234	Resistor, Corrosion	1	

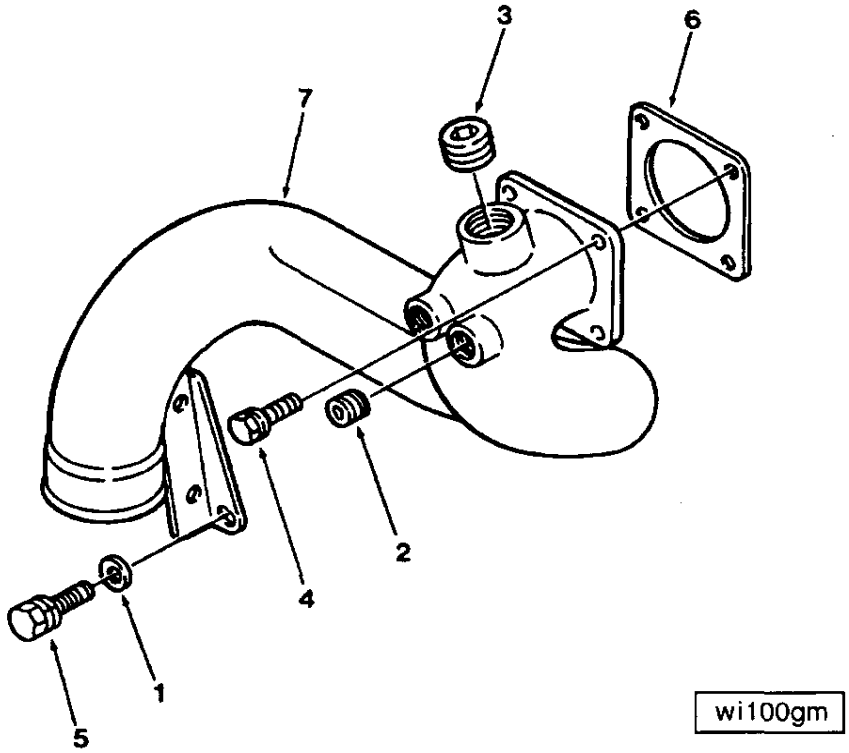

Ref No.	Part Number	Part Name	Req	Remarks
		WATER INLET CONNECTION		
		OPTION WI1060		One piece water inlet connection. Has 2.5 inch O.D. hose connection located between oil filter and alternator pointing straight down. Includes one 1/2 inch NPT hole, one 3/4 inch hole reduced to 1/2 inch NPT hole and one 1 inch NPT hole plugged.
1	63842	Washer, Plain	1	3/8 inch
2	3008468	Plug, Pipe	2	1/2 NPT
3	3008470	Plug, Pipe	1	1 NPT
4	3010595	Screw, Captive Washer Cap	4	3/8 - 16 x 1 inch
5	3012470	Screw, Captive Washer Cap	1	3/8 - 16 x 3/4 inch
6	3024960	Gasket, Connection		
7	3064438	Connection, Water Inlet	1	

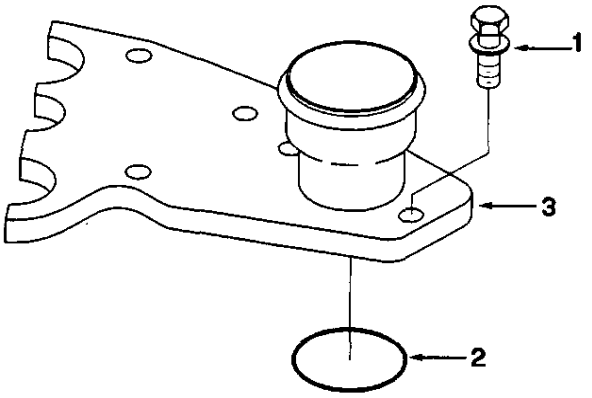

wo101gn

Ref No.	Part Number	Part Name	Req	Remarks
		WATER OUTLET CONNECTION		
		OPTION WO1111		2.50 inch O.D. vertical water outlet connection with integral mounting flange for aftercooler thermostat housing. Used with 1-pump 2-loop cooling system.
1	3040838	Screw, Captive Washer Cap	2	3/8 - 16 x 1 1/4 Inch
2	3073966	Seal, O Ring	1	
3	3084595	Connection, Water Transfer	1	

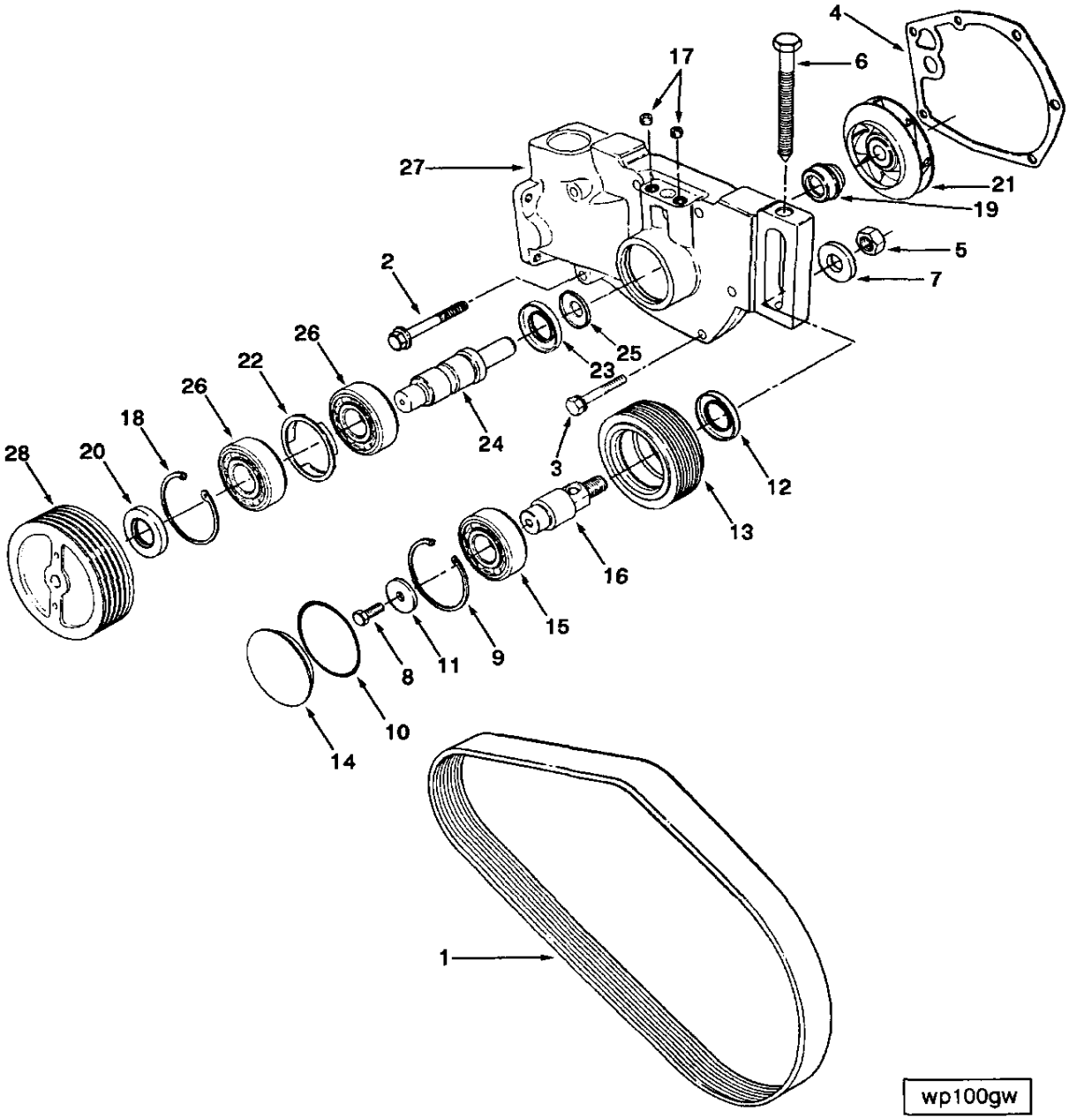
4
17
6
27
21
19
5
2
7
26
25
22
23
26
18
24
28
20
3
12
13
16
15
9
11
8
10
14
1
wp100gw

Ref No.	Part Number	Part Name	Req	Remarks
		WATER PUMP		
		OPTION WP1061		Water pump and mounting. Includes belt.
1	217638	Belt, V Ribbed	1	
2	3012468	Screw, Captive Washer Cap	4	3/8 - 24 x 2 1/4 inch
3	3066207	Screw, Hex Flange Head Cap	2	3/8 - 24 x 3 1/8 inch
4	3076522	Gasket, Water Pump	1	
5	S-201	Nut, Heavy Hexagon	1	5/8 - 11 UNC
6	66912-1-B	Screw, Hexagon Head Cap	1	
7	213082	Washer, Plain	1	5/8 inch
	3066330	Pulley, Idler	1	
8	S-107	Screw, Hexagon Head Cap	1	5/16 - 18 x 3/4 inch
9	S-16255	Ring, Retaining	1	
10	145551	Seal, O Ring	1	
11	3070458	Washer, Plain	1	1/4 inch
12	3074482	Seal, Oil	1	
13	3072355	Pulley, Idler	1	
14	3064404	Cover, Idler Pulley	1	
15	3064406	Bearing, Ball	1	
16	3066328	Shaft, Idler	1	
	3803605	Kit, Water Pump		
	(3076529)	Assembly, Water Pump	1	
17	S-911-B	Plug, Pipe	3	1/8 NPT
18	S-16255	Ring, Retaining	1	
19	3071085	Seal, Water Pump	1	
20	3038998	Seal, Oil	1	
21	3064386	Impeller, Water Pump	1	
	3064392	Assembly, Wtr Pump Shaft	1	
22	196844	Spacer, Bearing	1	
23	3074482	Seal, Oil	1	
24	(3064389)	Shaft, Water Pump	1	
25	3064390	Slinger, Water	1	
26	3064406	Bearing, Ball	2	
27	3076523	Body, Water Pump	1	
28	3067999	Pulley, Water Pump	1	
	3803614	Kit, Wtr Pump Rpr (major)		
21	3064386	Impeller, Water Pump	1	
24	3064392	Shaft, Water Pump	1	
22	196844	Spacer, Bearing	1	
24	3064392	Shaft, Water Pump	1	
25	3064390	Slinger, Water	1	
26	3064406	Bearing, Ball	2	
12	3074482	Seal, Oil	1	
	3803612	Kit, Wtr Pump Rpr (minor)		
18	S-16255	Ring, Retaining	1	
	43463-A	Seal, O Ring	1	
	3024960	Gasket, Connection	1	
19	3071085	Seal, Water Pump	1	
4	3076522	Gasket, Water Pump	1	

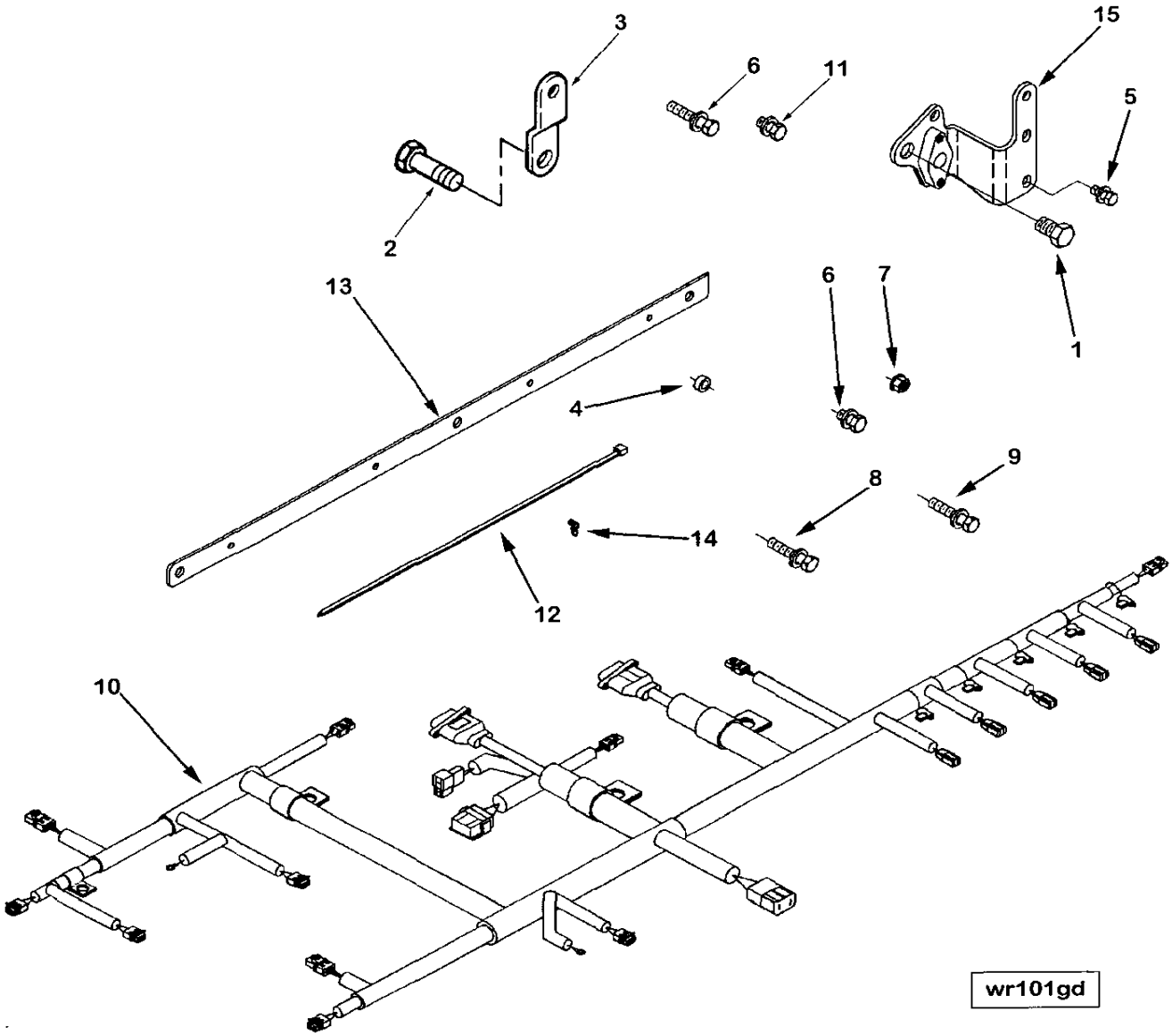
3
6
11
15
5
2
1
13
6
7
4
9
8
14
12
10
wr101gd

Ref No.	Part Number	Part Name	Req	Remarks
		WIRING ACCESSORIES		
		OPTION WR1039		Wiring harnesses and mounting for electronic control module on celect engines. For use with both one and two cylinder air compressors. Use only with ambient air sensors.
1	S-122-C	Screw, Hexagon Head Cap	1	
2	S-126-B	Screw, Hexagon Head Cap	1	
3	113710	Brace, Tube	1	
4	114850	Spacer, Mounting	3	
5	3015283	Screw, Captive Washer Cap	3	
6	3033822	Screw, Captive Washer Cap	6	
7	3063556	Nut, Hexagon Flange	5	
8	3067581	Screw, Captive Washer Cap	1	
9	3071225	Screw, Captive Washer Cap	1	
10	3095985	Harness, Wiring	1	
11	3609817	Screw, Captive Washer Cap	1	
	3609869	Brace, Wiring	1	
12	3062329	Clamp, Wire Tie	4	
13	3609868	Brace, Wiring	1	
14	3609872	Retainer, Wire Tie Clamp	4	
15	3865167	Brace, Wiring	1	

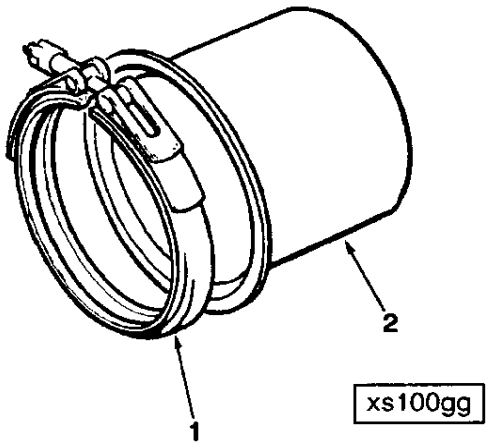

Ref No.	Part Number	Part Name	Req	Remarks
		EXHAUST OUTLET CONNECTION		
		OPTION XS1033		One 5 inch diameter (by 3 inch length) straight turbocharger exhaust connection. Includes one 5 inch marmon type V-band clamp.
1	186917	Clamp, V Band	1	
2	186918	Adapter, Exhaust Manifold	1	

Gasket Sets

Ref No.	Part Number	Part Name	Req	Remarks
		GASKET SETS		
	3804725	Set, Upper Engine Gasket	1	1996 Industrial Celect N14
	8078	Washer, Plain	3	1/4 inch
	43463-A	Seal, O Ring	2	
	68910	Seal, O Ring	4	
	109080	Seal, O Ring	4	
	131026	Seal, O Ring	12	
	186780	Seal, Thermostat	1	
	3008591	Gasket, Intake Manifold	3	
	3020943	Gasket, Exhaust Manifold	6	
	3033898	Seal, Rectangular Ring	2	
	3037537	Seal, O Ring	3	
	3042401	Seal, Grommet	1	
	3050667	Seal, O Ring	6	
	3064313	Gasket, Thermostat Housing	1	
	3066285	Gasket, Thermostat Housing	1	
	3066311	Gasket, Rocker Lever Cover	3	
	3068473	Gasket, Cam Follower	3	
	3069177	Gasket, Turbocharger	1	
	3073966	Seal, O Ring	1	
	3076189	Gasket, Cylinder Head	3	
	3076292	Gasket, Rkr Lever Housing	3	
	3084848	Seal, O Ring	1	
	3087740	Seal, O Ring	1	
	3095826	Seal, O Ring	1	
	3823546	Gauge, Capscrew	1	
	3909397	Seal,o-ring	6	
	3804724	Set, Single Head Gasket		1996 Industrial Celect N14.
	131026	Seal, O Ring	8	
	3008591	Gasket, Intake Manifold	3	
	3020943	Gasket, Exhaust Manifold	6	
	3042401	Seal, Grommet	1	
	3050667	Seal, O Ring	4	
	3069177	Gasket, Turbocharger	1	
	3076189	Gasket, Cylinder Head	1	
	3076292	Gasket, Rkr Lever Housing	1	
	3095826	Seal, O Ring	1	
	3202117	Gasket, Connection	1	
	3823546	Gauge, Capscrew	1	
	3909397	Seal, O Ring	2	

Gasket Sets

Ref No.	Part Number	Part Name	Req	Remarks
		GASKET SETS		
	3804635	Set, Lower Engine Gasket	1	
	67946	Washer, Plain	2	1 1/32 inch
	157551	Gasket, Oil Suc Connection	1	
	176027	Gasket, Support	1	
	200307	Seal, Oil	1	
	215705	Seal, O Ring	1	
	3004316	Seal, Oil	1	
	3005592	Gasket, Fan Spacer	1	
	3006736	Seal, Oil	1	
	3006737	Seal, Oil	1	
	3014778	Gasket, Lub Oil Pump Cover	1	
	3029847	Seal, O Ring	1	
	3033898	Seal, Rectangular Ring	2	
	3038998	Seal, Oil	3	
	3049221	Seal, O Ring	4	
	3049408	Gasket, Oil Pan	1	
	3066298	Gasket, Oil Cooler Support	1	
	3067613	Gasket, Lub Oil Pump	1	
	3067616	Gasket, Rear Cover	1	
	3067618	Gasket, Gear Cover	1	
	3068466	Gasket, Hand Hole	1	
	3068527	Seal, O Ring	6	
	3069098	Gasket, Cover Plate	1	
	3069678	Gasket, Lub Oil	1	
	3076225	Gasket, Acc Drive Support	1	
	3070477	Gasket, Oil Cooler Support	1	
	3070478	Gasket, Filter Head	1	
	3072341	Gasket, Oil Trf Connection	1	
	3072375	Seal, Rectangular Ring	2	
	3074400	Gasket, Cam Fol Housing	3	
	3074401	Gasket, Cam Fol Housing	3	
	3074402	Gasket, Cam Fol Housing	3	
	3074404	Gasket, Cam Fol Housing	3	
	3074482	Seal, Oil	2	
	3076522	Gasket, Water Pump	1	
	3076225	Gasket, Acc Drive Support	1	
	3076226	Gasket, Air Compressor	1	
	3076228	Gasket, Fuel Pump	1	
	3076522	Gasket, Water Pump	1	
	3803720	Kit, Seal	1	

Gasket Sets/Kits

Ref No.	Part Number	Part Name	Req	Remarks
		GASKET SETS/KITS		
	3804635	Set, Lower Engine Gasket	1	
	3804724	Set, Single Head Gasket	1	
	3804725	Set, Upper Engine Gasket	1	
	3803612	Kit, Wtr Pump Rpr (minor)	1	
	3803614	Kit, Wtr Pump Rpr (major)	1	
	3803745	Kit, Turbo Repair	1	
	3803741	Kit, Engine Piston	1	
	3804500	Set, Piston Ring	1	
	3804501	Kit, Cylinder	1	

Option Index

Option No.	Description	Page No.
AD1268	Accessory Drive Pulley	2
AD1707	Accessory Drive Pulley	3
AP1016	Agency Approval	4
BB1707	Crankshaft	11
	Cylinder Block	7
	Cylinder Liner Kit	8
	Water Header Cover	12
BR1178	Crankcase Breather	15
CP1049	Air Compressor	16
DA1198	Vibration Damper	19
DD1709	Cam Follower	21
DP1701	Fuel Pump Drive	23
EE1215	Alternator	24
EH1029	Alternator Mounting	27
EH1702	Alternator Drive Pulley	28
EI1008	Engine Instrument	29
EM1253	Front Engine Support	30
FF1198	Fuel Filter	33
FF1739	Fuel Pump Inlet Fitting	34
FF1778	Fuel Filter Plumbing	35
FH1714	Flywheel Housing Plumbing	36
FH11033	Flywheel Housing	39
FP1498	Fuel Pump Coupling	40
FP10111	Celect Fuel Pump	43, 45
FP10151	Fuel Pump Mounting	46
FT10139	Fuel Plumbing	49
FW1199	Flywheel	50
GG1701	Front Gear Cover	53
LA1061	Lifting Bracket	54
LC1025	Engine Oil Cooler	57
LF1173	Full Flow Oil Filter	58
LG1018	Oil Level Gauge	59
LP1705	Lubricating Oil Pump	61
OB1341	Cylinder Block Cover	62
OP1449	Oil Pan	65
OP1752	Oil Pan Mounting	67
PH1702	Electronic Control Module Plumbing	69
PH1730	Engine Control Module	71
PP2261	Camshaft	76
	Cylinder Head	79
	Engine Piston	75
	Injector And Mounting	81
	Piston Cooling Nozzle	73
PP10108	Turbocharger	83
	Turbocharger Kits	85
RD1004	Remote Oil Drain	86
RL1719	Rocker Lever	89
SM1703	Starting Motor	90
ST1341	Starting Motor	93
TB1323	Turbocharger Arrangement	95
TH1103	Thermostat Housing	97
TP1719	Turbocharger Plumbing	98
VC1047	Valve Cover	101
WA1710	Aftercooler Water Plumbing	103
WD1001	Water Discharge Plumbing	104

Option No.	Description	Page No.
WF1169	Corrosion Resistor	105
WI1060	Water Inlet Connection	106
WO1111	Water Outlet Connection	107
WP1061	Water Pump	109
WR1039	Wiring Accessories	111
XS1033	Exhaust Outlet Connection	112

INDEX

Part No.	Description	Page No.
AK4021-SS	Hose, Flexible	103
AK10018-SS	Hose, Flexible	35
AS10018-60SL	Hose, Flexible	69
BM-76340	Damper, Fuel Pump	43
S-107	Screw, Hexagon Head Cap	109
S-109	Screw, Hexagon Head Cap	15
S-114	Screw, Hexagon Head Cap	49
S-115	Screw, Hexagon Head Cap	98
S-116	Screw, Hexagon Head Cap	27
S-120-A	Screw, Hexagon Head Cap	21
S-122-C	Screw, Hexagon Head Cap	111
S-126-B	Screw, Hexagon Head Cap	111
S-181-B	Screw, Hexagon Head Cap	89
S-190	Screw, Hexagon Head Cap	15, 49
S-201	Nut, Heavy Hexagon	109
S-221	Nut, Heavy Hexagon	98
S-223	Nut, Heavy Hexagon	15
S-224	Nut, Heavy Hexagon	49
S-251	Nut, Regular Hexagon Jam	49
S-274	Nut, Heavy Hexagon Jam	46
S-600	Washer, Lock	49
S-602	Washer, Plain	15, 62, 89
S-603	Washer, Lock	15, 90
S-604	Washer, Lock	15
S-605	Washer, Lock	98
S-626	Washer, Plain	98
S-631	Washer, Plain	49
S-911-B	Plug, Pipe	79, 103, 109
S-1047-A	Elbow, Male Adapter	103
S-1315	Screw, Pan Head Cap	49
S-2286	Screw, Drive	43
S-16255	Ring, Retaining	109
4851	Gear, Flywheel Ring	50
8078	Washer, Plain	113
9245	Spacer, Starting Motor	90
43463-A	Seal, O Ring	97, 103, 109, 113
60408	Dowel, Pin	39, 53
63842	Washer, Plain	106
64775	Hose, Plain	15
64816-A	Dowel, Pin	45
65259-A	Shim	53
65259-B	Shim	53
65259-C	Shim	53
65527	Tube, Oil Filler	62
66292	Washer, Plain	7
66912-1-B	Screw, Hexagon Head Cap	109
67211	Dowel, Rear Main Bearing	7
67946	Washer, Plain	65, 86, 114
68138	Connector, Male	103
68193	Plug, Pipe	76
68365	Bushing	61
68367-C	Spacer, Lub Oil Filter	27
68445	Pin, Groove	79
68585	Dowel, Pin	7
68910	Seal, O Ring	103, 113
69102	Screw, Hexagon Head Cap	95
69324	Washer, Plain	46
69465	Clip	98
69521	Bushing	61
69736	Screw, Lock	21
69819	Plug, Pipe	103
69832	Nut, Regular Hexagon	103
69901	Plug, Pipe	7
70550	Dowel, Pin	3
70653	Dowel	53
70657	Cover, Access Hole	39
70700	Spring, Compression	43
70704	Washer, Plain	43, 45
70772	Screw, Fillister Head Cap	79
70802	Tee, Female Pipe	103
70880	Washer, Plain	23
70897	Nut, Lock	27
100099	Seal, Rectangular Ring	43
100129	Screw, Socket Head Cap	43, 45
101814	Tube, Oil Gauge	59
105199	Pin, Groove	95
105375	Nameplate	43
106289	Screw, Hexagon Head Cap	27
107460	Clip	103
107981	Cap, Filler	62
108722	Clip	98
109080	Seal, O Ring	57, 103, 113
110855	Gasket, Fuel Pump	45
113710	Brace, Tube	15, 111
114850	Spacer, Mounting	111
119364	Gear, Fuel Pumping	45
127316	Washer, Plain	19
128807	Ring, Retaining	45
129768	Spring, Valve	43
129839	Shield, Shutoff Valve	43
129859	Elbow, Male Union	35, 69
129866	Union, Male	69
129888	Seal, Rectangular Ring	43
131026	Seal, O Ring	113
132019	Cover, Water Header	12, 103
135308	Plate, Cover	79
135783	Washer, Lock	46
139969	Nipple, Plain Hexagon	103
139988	Seal, Rectangular Ring	43
142784	Head, Fuel Filter	33
145504	Seal, O-ring	61
145551	Seal, O Ring	109
146161	Washer, Plain	61
146483	Screen, Filter	43
147100	Connection, Fuel Crossover	79
148555	Dowel, Pin	89
151900	Seal, Rectangular Ring	43
153336	Body	43
153338	Cover, Fuel Pump Damper	43
153346	Screw, Socket Head Cap	43
153581	Screw, Twelve Point Cap	90
154916	Gasket, Hydraulic Pump	61
157551	Gasket, Oil Suc Connection	65, 114
158829	Screw, Hexagon Head Cap	27
160514	Washer, Plain	43
170664	Washer, Plain	23
175833	Screw, Hexagon Head Cap	2
175865	Shaft, Fuel Pump	45
176027	Gasket, Support	114
180372	Clip	49
181213	Elbow, Plain Adapter	49
181466	Washer, Lock	43, 45
183695	Key, Plain Woodruff	61
185573	Shim	53
186780	Seal, Thermostat	97, 113
186917	Clamp, V Band	112
186918	Adapter, Exhaust Manifold	112
188318	Seal, Thermostat	103
193136	Washer, Plain	3
196057	Disc, Valve	43
196155	Connector, Female	86
196844	Spacer, Bearing	109
198953	Bracket, Filter	33

INDEX

Part No.	Description	Page No.
200293	Elbow, Male Union	69
200307	Seal, Oil	114
200861	Washer, Plain	50
202897	Diaphragm,fuel Pump Damper	43
202903	Pin, Roll	7
203310	Washer, Plain	27
203760	Washer, Plain	27
203849	Elbow, Male Union	34
203863	Tee, Male Run	49
203933	Plug, Expansion	89
204048	Plate, Cover	61
205323	Screw, Twelve Point Cap	81
205401	Plug, Expansion	21
206963	Adapter, Filter Head	57
208346	Screw, Hexagon Head Cap	7
209995	Tube, Lub Oil Aerator	98
210179	Key, Rectangular	11
210884	Plug, Threaded	7
211031	Spacer, Accessory Drive	23
212112	Flange, Power Takeoff	19
212113	Screw, Twelve Point Cap	19
213082	Washer, Plain	109
213326	Pulley, Alternator	28
215090	Seal, O-ring	8, 75
215233	Bearing, Thrust	76
215705	Seal, O Ring	53, 114
216484	Dipstick	59
217323	Damper, Vibration	19
217638	Belt, V Ribbed	109
218505	Support, Alternator	27
218813	Bracket, Shipping	67
219154	Dowel, Ring	75
3000173	Screw, Hexagon Head Cap	23
3000175	Hub, Jaw Coupling	23
3004316	Seal, Oil	114
3005592	Gasket, Fan Spacer	114
3006182	Screw, Captive Washer Cap	57
3006736	Seal, Oil	53, 114
3006737	Seal, Oil	39, 114
3007025	Clamp, Tube	49
3007634	Plug, Expansion	79
3007635	Plug, Expansion	79
3007636	Plug, Expansion	79
3007759	Seal, O Ring	79
3008047	Cap, Main Bearing	7
3008048	Cap, Main Bearing	7
3008049	Cap, Main Bearing	7
3008069	Screw, Captive Washer Cap	33
3008464	Plug, Pipe	89
3008465	Plug, Pipe	95, 97
3008466	Plug, Pipe	95, 97
3008468	Plug, Pipe	7, 65, 89, 95, 106
3008470	Plug, Pipe	65, 106
3008530	Support, Camshaft Thrust	53
3008591	Gasket, Intake Manifold	95, 113
3008596	Clamp, Spring Hose	15
3009213	Lockplate	11
3010146	Spring, Compression	61
3010594	Screw, Captive Washer Cap	39
3010595	Screw, Captive Washer Cap	61, 62, 65, 106
3010596	Screw, Captive Washer Cap	33, 97, 98
3011342	Screw, Captive Washer Cap	39
3011712	Screw, Captive Washer Cap	53
3011713	Screw, Captive Washer Cap	53
3011714	Screw, Captive Washer Cap	53
3011715	Screw, Captive Washer Cap	53
3011833	Screw, Head Locking	50
3011951	Bushing	7
3011952	Plug, Expansion	7
3012468	Screw, Captive Washer Cap	109
3012470	Screw, Captive Washer Cap	106
3012471	Screw, Captive Washer Cap	27
3012472	Screw, Captive Washer Cap	27
3012473	Screw, Captive Washer Cap	57
3012526	Nut, Hexagon Flange	3
3012531	Shaft, Idler	61
3012726	Plug, Retainer	61
3013337	Pulley, Accessory Drive	2
3013786	Plug, Pipe	7, 16, 97
3013904	Screw, Captive Washer Cap	12, 49, 103
3014575	Cap, Fuel Pump Filter	43
3014754	Washer, Plain	61
3014755	Disc, Valve	61
3014756	Spring, Compression	61
3014778	Gasket, Lub Oil Pump Cover	61, 114
3015283	Screw, Captive Washer Cap	103, 111
3017051	Screw, Captive Washer Cap	43
3018924	Wire, Ground	93
3019174	Bearing, Main	11
3019180	Bearing, Main	11
3019186	Bearing, Main	11
3019192	Bearing, Main	11
3019198	Bearing, Main	11
3019204	Bearing, Main	11
3019617	Gear & Shaft	45
3019959	Ring, Liner Seal	7
3019960	Ring, Liner Seal	7
3020943	Gasket, Exhaust Manifold	95, 113
3021038	Motor, Starting	93
3021123	Seal, O Ring	43
3021601	Key, Plain Woodruff	76
3022589	Screw, Captive Washer Cap	61
3022590	Screw, Captive Washer Cap	61
3023816	Flywheel	50
3024960	Gasket, Connection	106, 109
3025458	Plug, Pipe	7
3027106	Dowel, Ring	79
3028075	Bushing	7
3028269	Bushing	7
3029085	Link, Adjusting	27
3029847	Seal, O Ring	65, 114
3029848	Tube, Lub Oil Transfer	65
3029850	Plate, Clamping	65
3031959	Assembly, Oil Pan	65
3032674	Screw, Captive Washer Cap	67
3032874	Seal, O-ring	8, 75
3033098	Brace, Tube	49
3033719	Dowel, Ring	45
3033724	Bushing	45
3033740	Valve, Check	45
3033742	Plug, Threaded	23, 43
3033822	Screw, Captive Washer Cap	111
3033898	Seal, Rectangular Ring	113, 114
3034412	Seal, O-ring	7, 23, 43, 45
3034438	Pin, Groove	23
3034451	Housing, Actuator	43
3034526	Screw, Captive Washer Cap	61
3034830	Retainer, Seal	65
3034986	Seal, Rectangular Ring	65
3035228	Seal, O-ring	7, 16, 95
3035580	Hose, Flexible	57

INDEX

Part No.	Description	Page No.
3035624	Screw, Captive Washer Cap	65, 103
3036052	Adapter, Crankshaft	19
3036460	Washer, Spring	95
3036865	Union, Male	49
3036866	Union, Male	61
3037045	Dowel, Ring	11
3037236	Seal, O Ring	57
3037535	Elbow, Male Union	57, 98
3037536	Plug, Threaded	7, 53, 57, 95, 97
3037537	Seal, O-ring	7, 29, 43, 53, 57, 71, 83, 85, 95, 97, 113
3038035	Tube, Breather	15
3038998	Seal, Oil	109, 114
3040303	Belt, V	28
3040813	Plug, Threaded	7
3040817	Seal, O Ring	69
3040818	Plug, Threaded	16, 95
3040836	Screw, Captive Washer Cap	103
3040838	Screw, Captive Washer Cap	95, 103, 107
3041572	Hub, Jaw Coupling	43
3042401	Seal, Grommet	101, 113
3042618	Nipple, Coupling	34
3042619	Nipple, Coupling	7, 43
3042889	Screw, Captive Washer Cap	57
3044413	Screw, Captive Washer Cap	95
3044566	Cover, Hand Hole	62
3044896	Cover, Protective	97
3044968	Cover, Hand Hole	62
3045618	Gear, Lub Oil Pumping	61
3045622	Gear, Lub Oil Pumping	61
3045846	Seal, Oil	45
3046200	Spider, Jaw Coupling	23, 40
3046201	Seal, O-ring	7, 34, 57, 71
3046202	Plug, Threaded	7, 57
3046246	Washer, Plain	7
3046943	Seal, O Ring	57
3047134	Tube, Breather	15
3048353	Screw, Captive Washer Cap	39
3049018	Cover, Rear	39
3049145	Adapter, Probe	97
3049221	Seal, O Ring	114
3049408	Gasket, Oil Pan	114
3049670	Screw, Captive Washer Cap	23
3050667	Seal, O-ring	89, 113
3051427	Screw, Captive Washer Cap	95
3053778	Tube, Fuel Bypass	49
3054609	Solenoid	43
3054889	Screw, Hex Flange Head Cap	30
3054947	Ring, Liner Seal	7
3054948	Ring, Liner Seal	7
3054949	Ring, Liner Seal	7
3055069	Plug, Threaded	65
3055145	Bearing, Connecting Rod	75
3055146	Bearing, Connecting Rod	75
3055147	Bearing, Connecting Rod	75
3055148	Bearing, Connecting Rod	75
3055149	Bearing, Connecting Rod	75
3055171	Screw, Connecting Rod Cap	75
3055280	Housing, Cam Follower	21
3056009	Disc, Actuator	43
3056155	Stud	83, 95
3056158	Nut, Hexagon Flange	83
3056415	Seal, O Ring	43
3056416	Plug, Threaded	43
3056508	Screw, Drive	4
3058462	Bushing	89
3058568	Washer, Lock	71
3058664	Screw, Hexagon Head Cap	30
3058675	Seal, Dust	67
3061400	Screw, Socket Head Cap	57
3061414	Fitting, Fuel Pump	34
3062329	Clamp, Wire Tie	111
3062568	Manifold, Exhaust	95
3062625	Cooler, Electronic Control	71
3063029	Support, Front Engine	30
3063166	Seal, O-ring	7
3063294	Seal, Grommet	103
3063556	Nut, Hexagon Flange	111
3063567	Screw, Captive Washer Cap	57
3063779	Plug, Threaded	36
3064230	Pulley, Crankshaft	19
3064247	Retainer, Valve Spring	79
3064267	Bushing	89
3064281	Seal, Valve Stem	79
3064291	Crankshaft, Engine	11
3064295	Bushing	75
3064304	Pin, Piston	75
3064305	Ring, Retaining	75
3064309	Pin, Roll	21
3064312	Guide, Valve Stem Intake	79
3064313	Gasket, Thermostat Hsg	97, 113
3064320	Screw, Twelve Point Cap	89
3064386	Impeller, Water Pump	109
3064390	Slinger, Water	109
3064392	Assembly, Wtr Pump Shaft	109, 109
3064393	Clamp, Injector	81
3064396	Ring, Compression Piston	75
3064397	Ring, Compression Piston	75
3064404	Cover, Idler Pulley	109
3064406	Bearing, Ball	109
3064438	Connection, Water Inlet	106
3064621	Socket, Cam Follower	21, 89
3065022	Manifold, Exhaust	95
3065024	Manifold, Exhaust	95
3065109	Brace, Tube	49
3065944	Screw, Captive Washer Cap	43
3066207	Screw, Hex Flange Head Cap	109
3066217	Shaft, Cam Follower	21
3066257	Nut, Regular Hexagon Jam	89
3066270	Dowel, Ring	89
3066277	Spacer, Cooler Support	57
3066285	Gasket, Thm Housing Cover	97, 113
3066287	Screw, Captive Washer Cap	97
3066288	Screw, Captive Washer Cap	97
3066291	Rod, Push	89
3066298	Gasket, Oil Cooler Support	57, 114
3066310	Screw, Captive Washer Cap	101
3066311	Gasket, Rocker Lever Cover	101, 113
3066323	Plug, Threaded	7
3066328	Shaft, Idler	109
3066330	Pulley, Idler	109
3066644	Screw, Slotted Set	89
3067424	Plug, Threaded	57
3067461	Screw, Captive Washer Cap	61
3067497	Cover, Protective	71
3067568	Bearing, Thrust	11
3067581	Screw, Captive Washer Cap	111
3067613	Gasket, Lub Oil Pump	61, 114
3067616	Gasket, Rear Cover	39, 114
3067618	Gasket, Gear Cover	53, 114

INDEX

Part No.	Description	Page No.
3067930	Screw & Spacer	95
3067941	Plug, Ball	21, 89
3067950	Plug, Retainer	89
3067952	Screw, Hexagon Head Cap	89
3067954	Screw, Captive Washer Cap	73
3067955	Screw, Captive Washer Cap	57
3067979	Clamp, V Band	95
3067984	Screw, Captive Washer Cap	57
3067987	Housing, Accessory Drive	23
3067999	Pulley, Water Pump	109
3068461	Cover, Lub Oil Pump	61
3068463	Gasket, Oil Pan	67
3068466	Gasket, Hand Hole	62, 114
3068473	Gasket, Cam Follower Hsg	21, 113
3068479	Connector, Electrical	81
3068505	Retainer, Connector Wiring	81
3068526	Nozzle, Piston Cooling	73
3068527	Seal, O Ring	73, 114
3068763	Shaft, Fuel Pump Drive	45
3068768	Ring, Retaining	43
3068770	Cover, Fuel Pump Gear	45
3068889	Pump, Gear Fuel	45
3068891	Gear & Shaft	45
3069098	Gasket, Cover Plate	12, 103, 114
3069120	Screw, Captive Washer Cap	49
3069129	Union, Male	98
3069177	Gasket, Turbocharger	83, 85, 113
3069629	Bracket, Lifting	54
3069633	Screw, Captive Washer Cap	54
3069637	Plug, Ball	89
3069672	Valve, Exhaust	79
3069678	Gasket, Lub Oil Clr Hsg	57, 114
3069680	Adapter, O Ring	57
3069681	Retainer, Connection	57
3069689	Crosshead, Valve	89
3070136	Seal, O Ring	81
3070137	Seal, O Ring	81
3070138	Seal, O Ring	81
3070458	Washer, Plain	109
3070460	Spring, Valve	79
3070465	Lever, Rocker	89
3070466	Lever, Rocker	89
3070475	Pin, Roll	7
3070477	Gasket, Oil Cooler Support	57, 114
3070478	Gasket, Filter Head	57, 114
3070486	Sleeve, Injector	79
3070501	Bracket, Oil Cooler	57
3070526	Screw, Hexagon Head Cap	54
3070982	Insert, Rocker Lever	89
3071075	Washer, Plain	79
3071085	Seal, Water Pump	109
3071161	Screw, Hexagon Head Cap	79
3071179	Clip	65
3071181	Plug, Threaded	7
3071225	Screw, Captive Washer Cap	111
3071228	Tube, Water Transfer	89
3071229	Plug, O-ring	89
3071643	Seal, Oil	45
3072301	Valve, Bypass	57
3072302	Spring, Compression	57
3072316	Washer, Plain	23
3072341	Gasket, Oil Trf Connection	57, 114
3072355	Pulley, Idler	109
3072357	Bracket, Lifting	54
3072367	Support, Accessory Drive	23
3072369	Collet, Half Valve	79
3072372	Connection, Oil Transfer	57
3072375	Seal, Rectangular Ring	57, 114
3072377	Plunger, Bypass Valve	57
3072378	Plug, Threaded	57
3072395	Shaft, Shutoff Valve	57
3072397	Seal, O Ring	57
3072483	Alternator	24
3073343	Gear, Camshaft	76
3073344	Gear, Crankshaft	11
3073494	Lever, Rocker	89
3073499	Rod, Push	89
3073966	Seal, O Ring	107, 113
3074164	Pin, Cam Follower Roller	21
3074316	Spacer, Seal	45
3074317	Spacer, Seal	45
3074375	Shaft, Rocker Lever	89
3074376	Shaft, Rocker Lever	89
3074400	Gasket, Cam Fol Housing	114
3074401	Gasket, Cam Fol Housing	114
3074402	Gasket, Cam Fol Housing	114
3074404	Gasket, Cam Fol Housing	114
3074482	Seal, Oil	109, 114
3074975	Nut, Regular Hexagon Jam	89
3075022	Cover, Rocker Lever	101
3075024	Cover, Rocker Lever	101
3075027	Pin, Cam Follower Roller	21
3075318	Screw, Hexagon Head Set	89
3075338	Support, Fuel Pump	45
3076091	Bushing	53
3076164	Connection, Tur Oil Drain	98
3076189	Gasket, Cylinder Head	79, 113
3076202	Seal, Dust	3
3076203	Seal, Dust	53
3076220	Housing, Rocker Lever	89
3076221	Housing, Rocker Lever	89
3076225	Gasket, Acc Drive Support	23, 114
3076226	Gasket, Air Compressor	114
3076228	Gasket, Fuel Pump	40, 114
3076256	Harness, Wiring	81
3076266	Tube, Fuel Supply	49
3076292	Gasket, Rkr Lever Housing	89, 113
3076489	Thermostat	97
3076491	Tube, Water Transfer	97
3076496	Cover, Gear	53
3076500	Shaft, Accessory Drive	23
3076515	Insert, Valve Intake	79
3076522	Gasket, Water Pump	109, 114
3076523	Body, Water Pump	109
3076539	Housing, Thermostat	97
3077620	Washer, Plain	57
3078151	Sensor,Position	71
3078292	Seal, Oil	53
3078310	Gear, Accessory Drive	23
3078330	Rod, Engine Connecting	75
3078338	Thermostat	57
3078407	Cooler, Oil	57
3079842	Screw, Captive Washer Cap	103
3080406	Sensor, Pressure	29
3080407	Sensor, Pressure	71
3080837	Gasket, Fuel Pump	45
3081151	Screw, Twelve Point Cap	89
3081219	Housing, Flywheel	39
3081278	Screw, Hexagon Head Cap	21
3082523	Screw, Captive Washer Cap	71
3082570	Clip	15
3082580	Ring, Oil Piston	75
3082608	Screw, Captive Washer Cap	67
3082622	Hose, Flexible	61

INDEX

Part No.	Description	Page No.
3083945	Lever, Cam Follower	21
3084020	Insert, Valve Exhaust	79
3084045	Valve, Intake	79
3084060	Assb., Cylinder Head (tla)	79
3084382	Gasket, Aftercooler Cover	95
3084383	Core, Aftercooler	95
3084384	Thermostat	103
3084385	Tube, Water Outlet	103
3084387	Cover, Thermostat Housing	103
3084388	Connection, Water Transfer	103
3084389	Connection, Water Transfer	103
3084390	Bracket, Water Tube	103
3084521	Sensor, Pressure	71
3084594	Clamp, Tube	103
3084595	Connection, Water Transfer	107
3084596	Housing, Thermostat	103
3084599	Tube, Water Transfer	103
3084600	Cover, Thm Housing	97
3084601	Tube, Air Crossover	95
3084603	Retainer, Seal	95
3084725	Tube, Water Transfer	103
3084792	Gasket, Thm Housing Cover	103
3084848	Seal, O Ring	95, 113
3085185	Sensor, Temperature	71
3085404	Pump, Gear Fuel	45
3085406	Pump, Fuel	43
3085613	Plunger,prs Regulator	45
3085614	Spring, Compression	45
3085615	Ring, Retaining	45
3087690	Draincock	104
3087740	Seal, O Ring	79, 113
3087782	Tube, Fuel Bypass	49
3087815	Plug, Retainer	61
3088172	Kit, Oil Cooler	57
3088173	Assembly, Oil Cooler	57
3088178	Injector	81
3088845	Assembly, Accessory Drive	23
3088932	Support, Oil Cooler	57
3088933	Tube, Oil Cooler	103
3095051	Tube, Lub Oil Suction	65
3095130	Pulley, Accessory Drive	3
3095723	Nut, Hexagon Flange	65
3095826	Seal, O Ring	95, 113
3095985	Harness, Wiring	111
3096414	Dataplate	4
3096662	Module, Electronic Control	71
3097278	Manifold, Air Intake	95
3202117	Gasket, Connection	83, 85, 98, 113
3202162	Wire, Ground	24
3315843	Separator, Fuel Water	33
3318853	Element, Lub Oil Filter	58
3504959	Clamp, V Band	83, 85
3519155	Shield, Turbocharger Heat	83
3519163	Screw, Drive	83
3519471	Nut, Lock	83
3521439	Slinger, Oil	83
3521440	Collar, Thrust	83
3521441	Seal, Split Ring	83, 85
3521442	Seal, Split Ring	83, 85
3522075	Shaft & Wheel	83
3525304	Impeller, Tur Compressor	83
3527907	Dataplate	83
3529372	Nut, Regular Hexagon	83, 85
3529658	Baffle, Oil	83
3532045	Clamp, V Band	83, 85
3532984	Bearing, Tur Thrust	83, 85
3536097	Housing, Tur Bearing	83
3536998	Housing, Turbine	83
3537961	Housing, Compressor	83
3609817	Screw, Captive Washer Cap	111
3609824	Gear, Lubricating Oil Pump	61
3609825	Shaft, Lube Oil Pump	61
3609832	Pump, Lubricating Oil	61
3609867	Dataplate	71
3609868	Brace, Wiring	111
3609869	Brace, Wiring	111
3609872	Retainer, Wire Tie Clamp	111
3609888	Gear, Lub Oil Pumping	61
3627381	Seal, Rectangular Strip	95
3709510	Ring, Retaining	83, 85
3718373	Ring, Retaining	83, 85
3722366	Bearing, Turbocharger	83, 85
3723863	Ring, Retaining	83, 85
3751948	Seal, O Ring	83, 85
3757753	Sleeve, Oil Control	83, 85
3759618	Plate, Oil Seal	83
3801260	Set, Main Bearing	11
3801261	Set, Main Bearing	11
3801262	Set, Main Bearing	11
3801263	Set, Main Bearing	11
3801264	Set, Main Bearing	11
3801826	Kit, Cylinder Liner	8
3803477	Kit, Oil Seal	45
3803493	Kit, Fuel Pump Support	45
3803605	Kit, Water Pump	109
3803612	Kit, Wtr Pump Rpr (minor)	109, 115
3803614	Kit, Wtr Pump Rpr (major)	109, 115
3803718	Block, Cylinder	7
3803720	Kit, Seal	114
3803726	Kit, Exhaust Valve	79
3803741	Kit, Engine Piston	75, 115
3803745	Kit, Turbo Repair	85, 115
3803854	Kit, Intake Valve	79
3804500	Set, Piston Ring	75, 115
3804501	Kit, Cylinder	75, 115
3804635	Set, Lower Engine Gasket	114, 115
3804659	Camshaft	76
3804724	Set, Single Head Gasket	113, 115
3804725	Set, Upper Engine Gasket	113, 115
3804738	Kit, Turbocharger	83
3818599	Screw, Captive Washer Cap	46, 67
3821577	Body, Lubricating Oil Pump	61
3823546	Gauge, Capscrew	113
3844234	Resistor, Corrosion	105
3865167	Brace, Wiring	111
3865178	Screw, Captive Washer Cap	95
3865237	Roller, Cam Follower	21
3865238	Lever, Cam Follower	21
3865239	Housing, Cam Follower	21
3865312	Sensor, Temperature	29, 71, 97
3884126	Plunger, Prs Regulator	61
3892498	Seal, Wire	81
3895489	Roller, Cam Follower	21
3901865	Screw, Hex Flange Head Cap	71
3909397	Seal,o-ring	113, 113
3918334	Head, Lub Oil Filter	57

Cummins Engine Company, Inc.
Box 3005
Columbus, Indiana, U.S.A., 47202

Registered Office
Cummins Engine Company, Ltd.
46-50 Coombe Road
New Malden,
Surrey KT3 4QL,
England
Registration No. 573951 England

Copyright © 1996
Cummins Engine Company, Inc.

Bulletin No. 3672101 Printed in U.S.A. 7/96